1500VDC String Inverter

SOLECTRIA® XGI 1500

Installation and Operation Guide

Models:

XGI 1500-125/125-UL	XGI 1500-125/125-UL-A
XGI 1500-125/150-UL	XGI 1500-125/150-UL-A
XGI 1500-150/166-UL	XGI 1500-150/166-UL-A
XGI 1500-166/166-UL	XGI 1500-166/166-UL-A
XGI 1500-125/125-3S	XGI 1500-166/166-3S

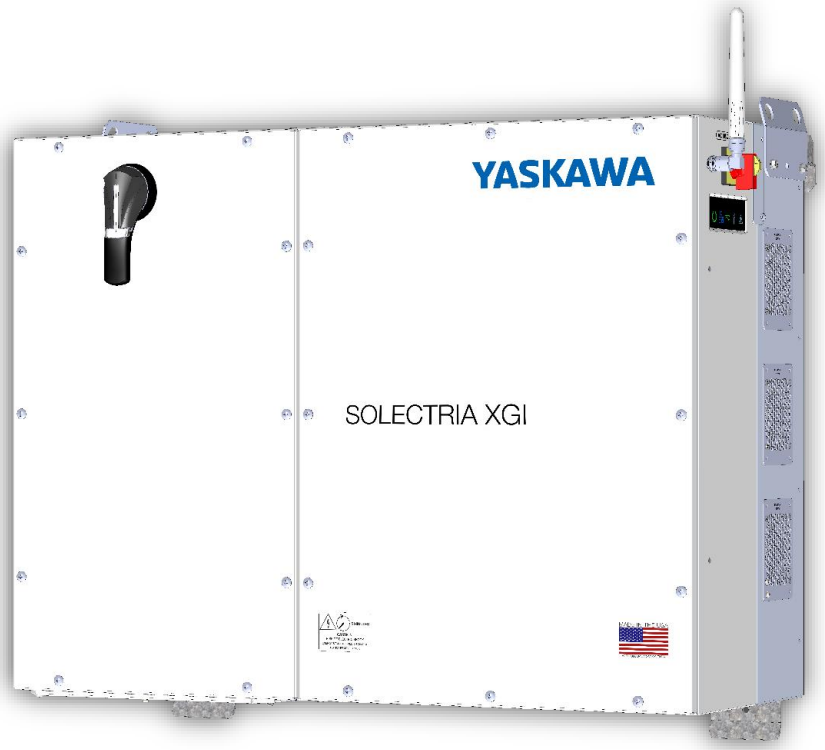

Contents

1 IMPORTANT SAFETY INSTRUCTIONS 4
1.1 Hazard Symbols 4
1.2 Symbols on Labels 4
1.3 General Safety Messages 5
1.4 Status Panel 6
2 Overview 7
2.1 Inverter Overview 7
2.2 Inverter Placement 10
2.3 Unpacking 11
3 Installation 11
3.1 Installation Sequence 11
3.2 Inverter Size, Spacing and Mounting 12
3.3 Wiring 15
3.4 Transformer Configuration 19
3.5 Equipment Grounding 20
3.6 AC Connections 21
3.7 AC Breaker Specifications 22
3.8 DC Connections 23
3.9 DC Connection Using the XGI Remote or Attachable Combiner 25
3.10 DC Connection Using the XGI Attachable Combiner Box 27
3.11 Conduit Sealing 29
3.12 Antenna Mounting 30
3.13 Replace Wiring Box Cover 30
4 Startup and Verification Test 31
4.1 Startup Checklist 31
4.2 Startup Steps 31
4.3 Commissioning Test 32
5 Communication Installation and User Interface 32
5.1 Connection to the Internet 33
5.2 Communication Conductors 33
5.3 Connecting Multiple Inverters 33
5.4 XGI Gateway Inverters Firewall 36
5.5 Networking with Other Devices 36
5.6 Monitoring Compatibility 37
5.7 Third-Party Data Acquisition System (DAS) Connection 37

5.8 Static IP Configuration, Gateway Inverter 38
5.9 Port Forwarding 38
5.10 Static Routing 40
5.11 Manage Cluster IP Address 41
5.12 Communication and I/O Ports 42
6 Graphical User Interface 43
6.1 XGI Terminology 43
6.2 Graphical User Interface (GUI) Overview 43
6.3 Menu Structure 49
7 Firmware Updates 50
7.1 Automatic Remote Firmware Updates 50
7.2 Manual Firmware Updates, Locally 50
7.3 Manual Firmware Updates, Remote Server 50
7.4 Manual Firmware Updates, Remote Access Portal 50
8 Communication Commissioning 52
8.1 Communication Commissioning Checklist 52
9 Maintenance and Troubleshooting 53
9.1 Event Codes 53
9.2 Regular Preventative Maintenance 58
10 Specifications 62
10.1 General Specifications 62
10.2 Enclosure 62
10.3 Voltage and Frequency Limits and Trip Times 63
10.4 Temperature and Altitude 64
10.5 P-Q Curves 66
11 Options 70
11.1 Attachable Combiner Box (Optional) 70
11.2 Remote Combiner (Optional) 72
12 Configuration with Low Grid SCR Values 73
13 Power Limiting Service 73
14 Appendix 74
14.1 Warranty and RMA Instructions 74
14.2 Yaskawa Solectria Solar Contact Information 74
14.3 Authorization to Mark 75

1 IMPORTANT SAFETY INSTRUCTIONS

1.1 Hazard Symbols

Table 1-1 Hazard Symbols

DANGER	**DANGER** indicates a hazardous situation, which, if not avoided, will result in serious injury or death.
WARNING	**WARNING** indicates a hazardous situation, which, if not avoided, could result in serious injury or death.
CAUTION	**CAUTION** indicates a hazardous situation, which, if not avoided, will result in minor or moderate injury.
NOTICE	**NOTICE** indicates a hazardous condition, which, if not avoided, could result in equipment working abnormally or property loss.
INFO→	**INFO** indicates important supplementary information to use the product effectively.

1.2 Symbols on Labels

Table 1-2 Explanation of Symbols

∿	AC Signal
⎓	DC Signal
⏚	Equipment Ground
∅	AC Power Phase
○	Off
|	On
	Refer to Operating Instructions
	Caution: Risk of Electric Shock
	Caution: Risk of Electric Shock Timed Discharge

1.3 General Safety Messages

DANGER	**Electric Shock Hazard** Components with hazardous voltage and energy will electrocute operator. Operator shall avoid touching live components with hazardous voltage and energy.

WARNING	**Unqualified Operator Hazard** Operator may cause a hazardous situation by making incorrect installation or wiring connections. A qualified technician shall do all installation and wiring connections to comply with all local, national, or country specific guidelines for safety.

WARNING	**Electrical Shock Hazard** Operator may contact components with hazardous voltage and energy. Use proper safety equipment including Personal Protective Equipment (PPE) when de-energizing the unit. De-energize the unit, wait 5 minutes, and verify the absence of voltage before opening the equipment or removing any protective shields.

NOTICE	**General Damage to Equipment** Attempting to service the inverter improperly may result in damage. Contact Yaskawa Solectria Solar Technical Support for maintenance.

INFO→	**Read and Follow Instructions** Failure to read and follow instructions may void the warranty. Install the inverter according to the instructions in this manual.

SAVE THESE INSTRUCTIONS

This manual contains instructions for models:

XGI 1500-125/125-UL	**XGI 1500-125/125-UL-A**
XGI 1500-125/150-UL	**XGI 1500-125/150-UL-A**
XGI 1500-150/166-UL	**XGI 1500-150/166-UL-A**
XGI 1500-166/166-UL	**XGI 1500-166/166-UL-A**
XGI 1500-125/125-3S	**XGI 1500-166/166-3S**

1.4 Status Panel

The status panel consists of five LEDs that provide useful information to the user regarding the function of the inverter. LEDs are shown in Figure 1-1 and defined in Table 1-3.

Figure 1-1 Status Panel

Table 1-3 Explanation of Symbols on Status Panel

	Ready (Yellow) On: Inverter is initialized and ready to operate Off: Inverter is not ready to operate
	Network and Communication (Yellow) On: Network and communication services are working properly Off: Network and communication services are offline
	Power (Yellow) On: Inverter is generating AC power Off: Inverter is not generating AC power
	Maintenance (Yellow) On: Inverter needs maintenance or service Off: Inverter does not need maintenance or service
	Power Fault (Red) On: Power fault that needs service and may be a hazard Off: There is no power fault

2 Overview

2.1 Inverter Overview

A solar inverter converts DC power from solar modules to AC power, and exports it to the electrical grid as shown in Figure 2-1. The SOLECTRIA XGI 1500 is a state-of-the-art inverter designed and made in the USA using global components and is compliant with the Buy American Act.

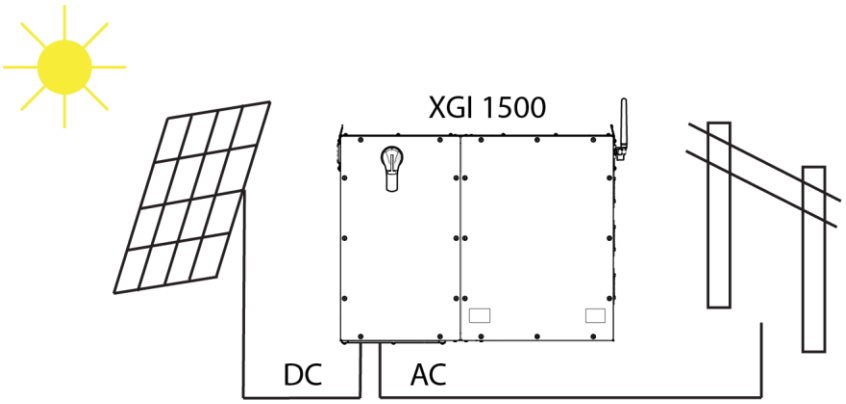

Figure 2-1 Inverter Usage

2.1.1 Inverter Features

- High conversion efficiency using 3-level conversion technology.
  - Max efficiency: 99.0%
  - CEC efficiency: 98.5%
- Grid adaptability
  - Supports multiple grid standards
  - Certified to UL1741SA for CA Rule 21 compliance
  - Adjustable reactive power
  - Adjustable power factor (PF) ±0.8
  - Remote power curtailment
- Ethernet connectivity
- Wi-Fi accessible user interface
- Protective enclosure: NEMA 4X rated enclosure allows for outdoor use.
- Flexible design: The SOLECTRIA XGI 1500 series inverters provide a flexible solution for both distributed and centralized “virtual central” system architecture. Two optional versions of combiners are offered: the Attachable Combiner (CA-XGI1500 series) and the Remote Combiner (CR-XGI1500 series) with 16, 20, 24, 26 or 28 fuse positions.

2.1.2 Inverter Protection Features

- Short-circuit protection
- Anti-islanding protection
- Input and output surge protection
- Input over-current protection
- Self-monitoring variables:
    - DC input insulation resistance with respect to ground
    - AC output voltage and frequency
    - Leakage current to ground
    - DC injection in AC output
    - Internal ambient temperature
    - IGBT module temperature

INFO→	**Lightning Strikes** The XGI 1500 inverter features Metal Oxide Varistors (MOVs) that provide protection against line surges on both DC and AC inputs. However, these MOVs are not designed to serve as primary protection against lightning strikes, particularly those occurring near the project site. For effective lightning protection, consult a qualified engineer with site-specific knowledge to develop an appropriate protection plan.

2.1.3 Communication Overview

Users can communicate with the SOLECTRIA XGI 1500 using a Wi-Fi-enabled smart device, such as a laptop, tablet, or smartphone. The SOLECTRIA XGI 1500 monitors internal variables which are sent via a modem or gateway to the Internet cloud. In the cloud, these data are stored on the SRV server where they can be accessed by the end user (additional fee applies). Add-ons such as a weather station and a Data Acquisition System (DAS) are supported using Ethernet cable.

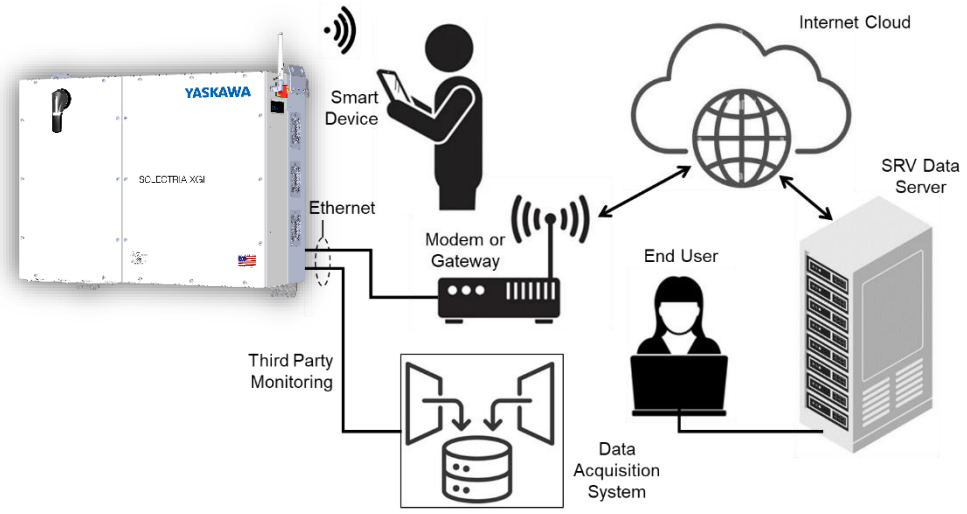

Figure 2-2 Communications Overview

2.1.4 **Inverter Features**

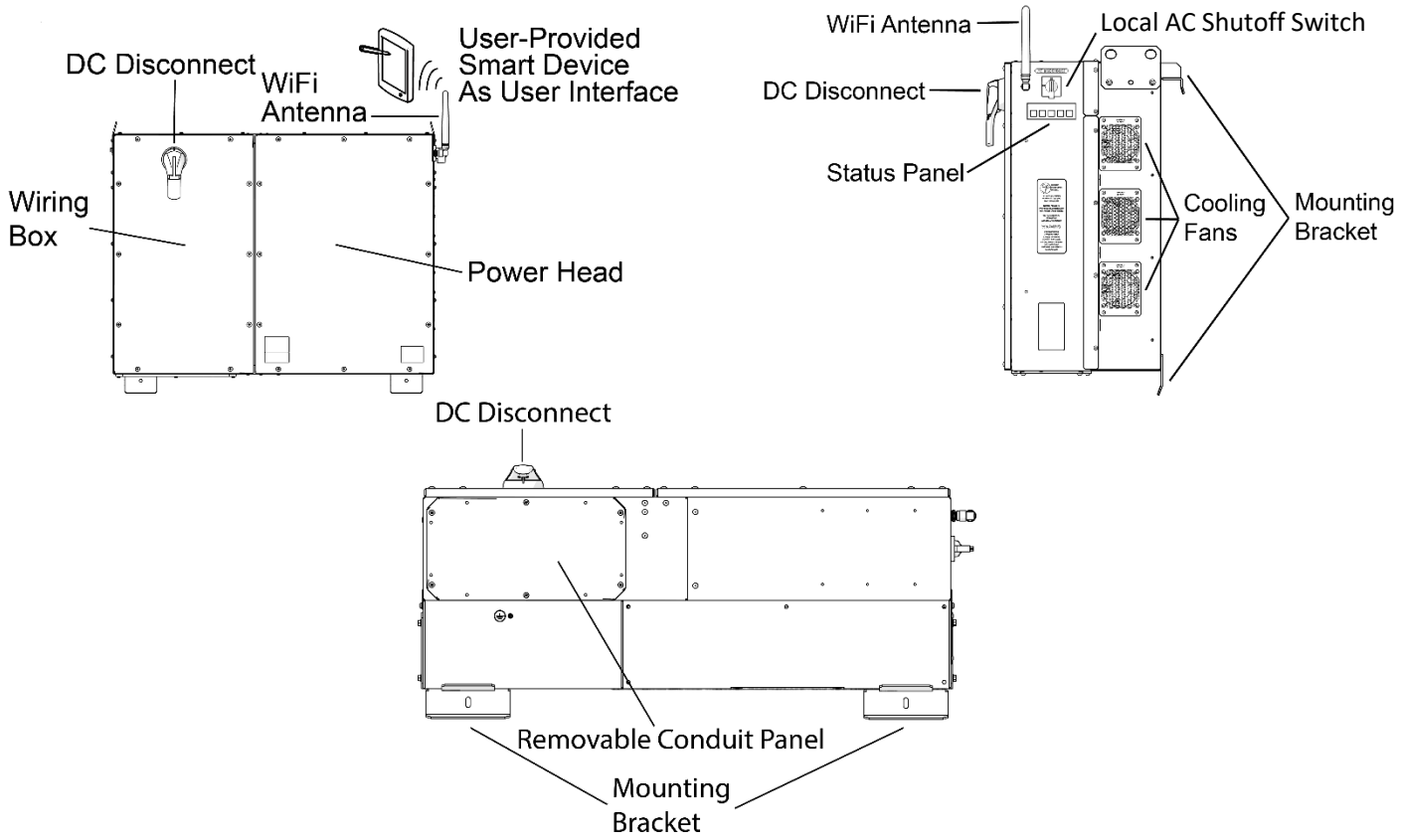

Figure 2-3 SOLECTRIA XGI 1500 Inverter Features: Front (Left), Right Side (Right), and Bottom (Bottom)

2.2 Inverter Placement

The SOLECTRIA XGI 1500 inverter is rated for outdoor use and will operate when exposed to direct sunlight or rain. To obtain the best performance and ensure longevity of the inverter, it is recommended to mount the inverter out of the direct sunlight, see Figure 2-4.

INFO→	**Inverter Orientation** It is recommended to install the inverter facing north to minimize direct sun exposure.

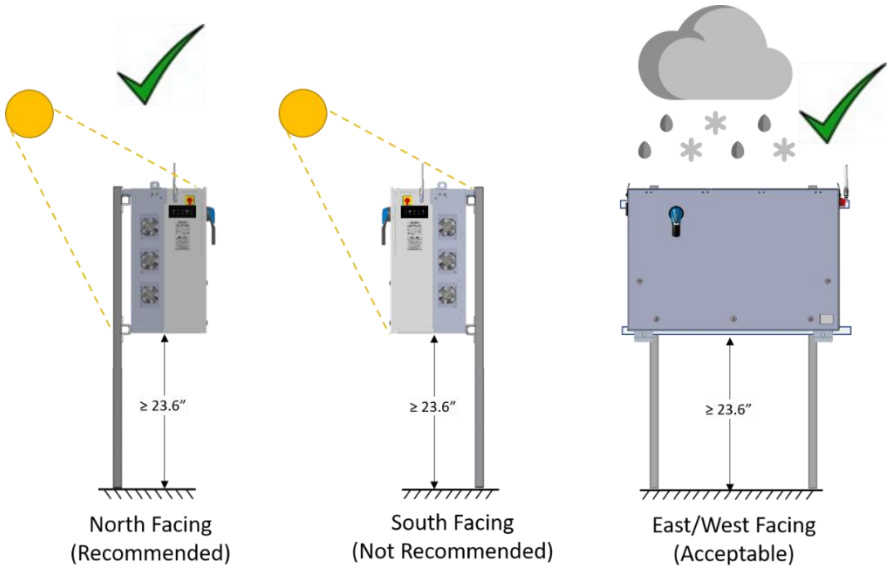

Figure 2-4 Inverter Orientation

Mount the inverter vertically and level to the ground. Do not install the inverter in a pitched/tilted/angled orientation. Note also in Figure 2-5 that the minimum required distance from the bottom of the inverter to ground is 23.6".

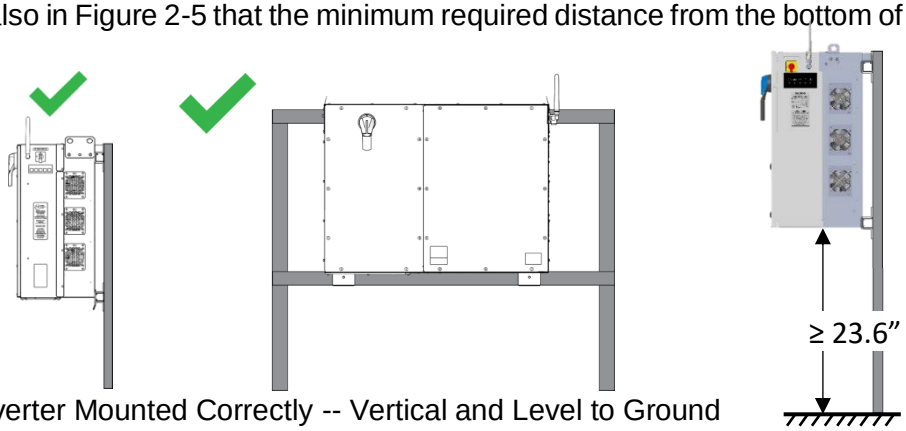

Figure 2-5 Inverter Mounted Correctly -- Vertical and Level to Ground

INFO→	**Inverter Mounting Height Above Grade** The XGI 1500 inverter must be installed at a height that provides safe and unobstructed access to user-operable controls, disconnects, display, wiring compartment, and components requiring routine inspection or maintenance. When installed the inverter mounting height shall not require personnel to use ladders, lifts, or other temporary means to perform routine operation, inspection, or maintenance.

2.3 Unpacking

When storing the packaged inverters, keep them in an area where they will not get damaged or flooded. Storage temperatures should be maintained in the range -40°F to +167°F (-40°C to +75°C). Open the box carefully to avoid damaging the contents.

Table 2-1 Contents of Box

1. Inverter (XGI 1500-166/166-UL, XGI 1500-150/166-UL, XGI 1500-125/150-UL, XGI 1500-125/125-UL, XGI 1500-166/166-UL-A, XGI 1500-150/166-UL-A, XGI 1500-125/150-UL-A, XGI 1500-125/125-UL-A, XGI 1500-166/166-3S, or XGI 1500-125/125-3S)
2. Voltage-Frequency Test Report
3. One page information sheet for Wi-Fi connection to smart device
4. Hardware Kit containing: a. Antenna for Wi-Fi connection to smart device. b. 90 degree coaxial connection for antenna.

3 Installation

3.1 Installation Sequence

1. Remove the inverter from its crate and properly dispose of the packaging material.
2. Secure the inverter to the structure, carefully observing the lifting hazard below.

⚠ CAUTION	**Lifting Heavy Object Hazard** Proper lifting technique must be used in order to avoid injuries. Lift into place with at least two people or using a mechanical aid

3. Turn off the upstream AC breaker and apply a lock.
4. Turn the Local AC Shutoff Switch on the inverter to “OFF”.
5. Turn the DC switch on the inverter to “OFF”.
6. Remove the wiring box cover.
7. Confirm that the PV output circuit conductors (from a Combiner) are de-energized.
8. Connect the AC wires from the grid to the AC terminal block in the wiring box.
9. Connect the PV output circuit wires (from a Combiner) to the DC terminal block in the wiring box.
10. Connect the communication wires.
11. Replace the inverter cover.
12. Connect the antenna to the inverter using the 90-degree coaxial connection.

3.2 Inverter Size, Spacing and Mounting

The dimensions of the XGI 1500 inverter are shown in Figure 3-1.

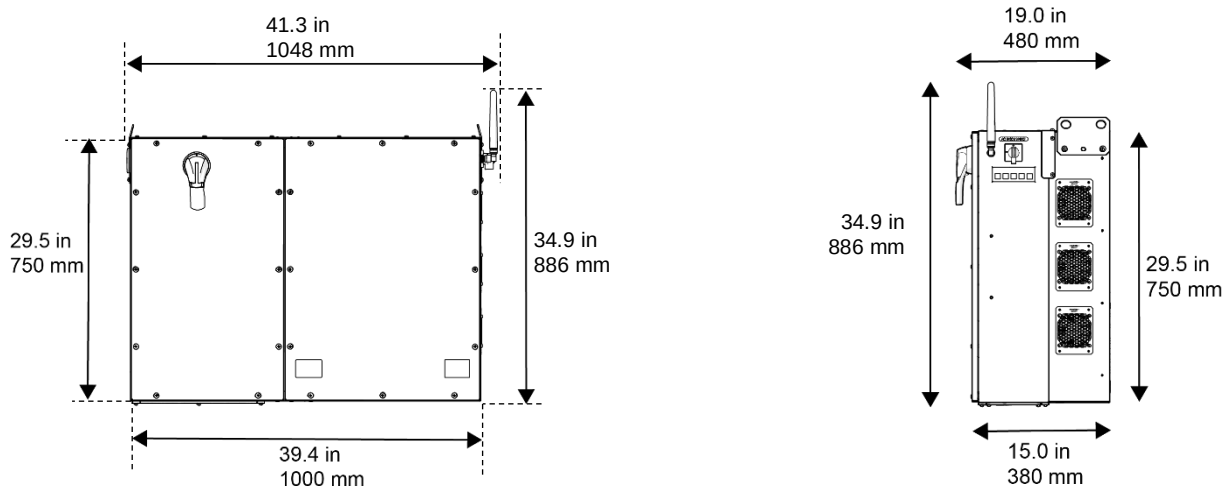

Figure 3-1 Inverter Dimensions

Mount the inverter to $1^5/_8$ inch strut channel as shown in Figure 3-4. Ensure that the strut channel structure is capable of supporting 270 lbs (122 kg) plus an effective safety margin. Structural integrity of the strut structure is the responsibility of the installer. Space the inverters no closer than shown in Figure 3-2 for thermal exhaust and wiring clearance. Keep this area free from debris, vegetation, and other obstructions.

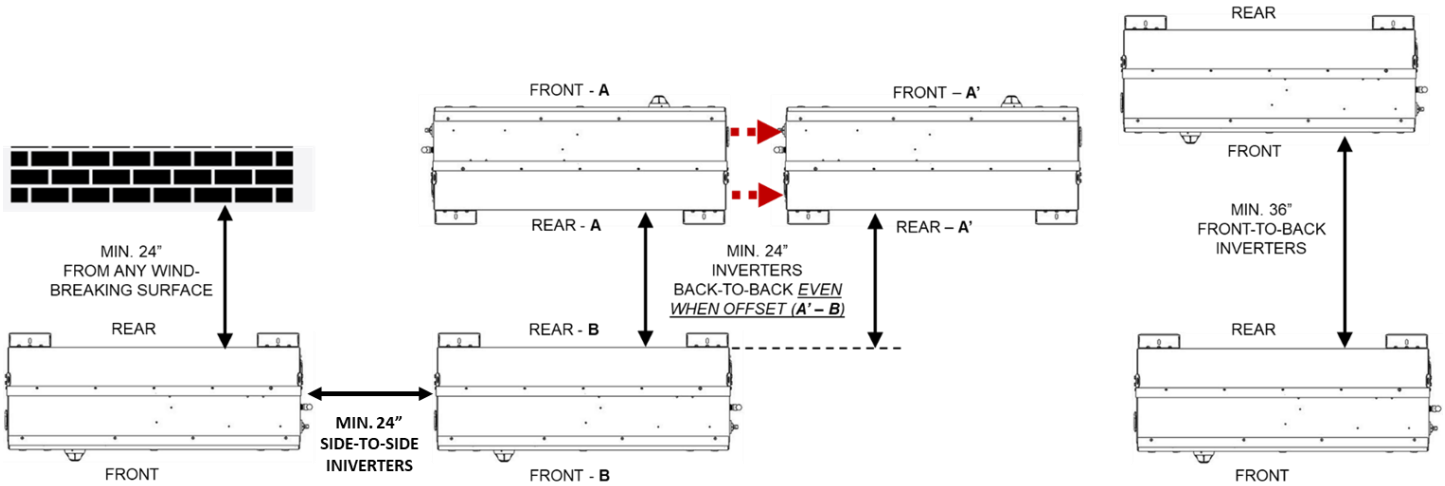

Figure 3-2 Inverter Minimum Spacing and Mounting – Top View

INFO→	**Spacing of Inverters: Back-to-Back or Front-to-Back** Observe the required minimum spacing in Fig. 3-2. This spacing is required even if the inverter in front and the inverter behind are staggered or offset (left – right) in their position.

Refer to Figure 3-3 to space strut channels for mounting. The holes on the bottom use the centerline as the reference point and the hook at the top uses the top of the upper strut channel as its reference point. Use two 8 mm ($^{5}/_{16}$ in) bolts (not provided) to connect the bottom brackets to the strut channel.

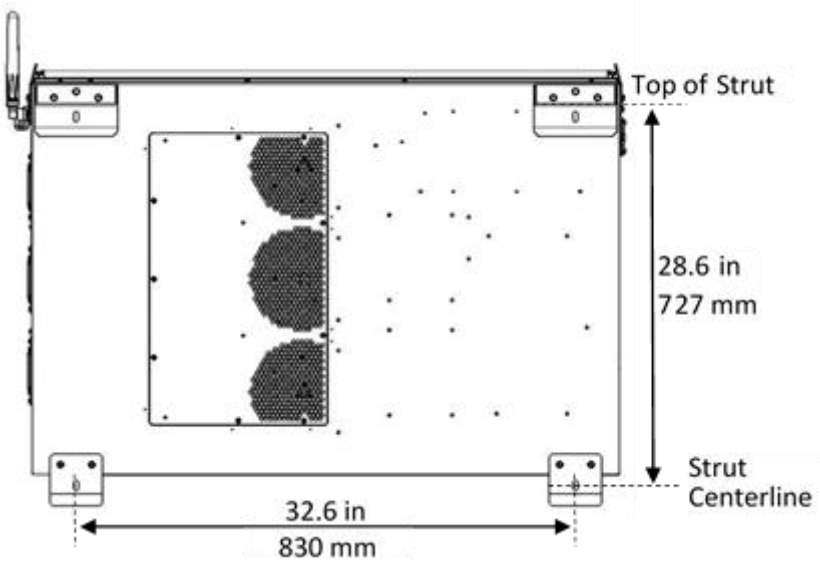

Figure 3-3 Mounting Holes – Rear View

Attach the inverter, with its mounting brackets in place, to the strut channel as shown in
Figure **3-5**4. The top brackets fit over the upper strut bar to hang the inverter while securing the upper and lower brackets to the strut channel. The brackets are attached to the inverter in the factory.

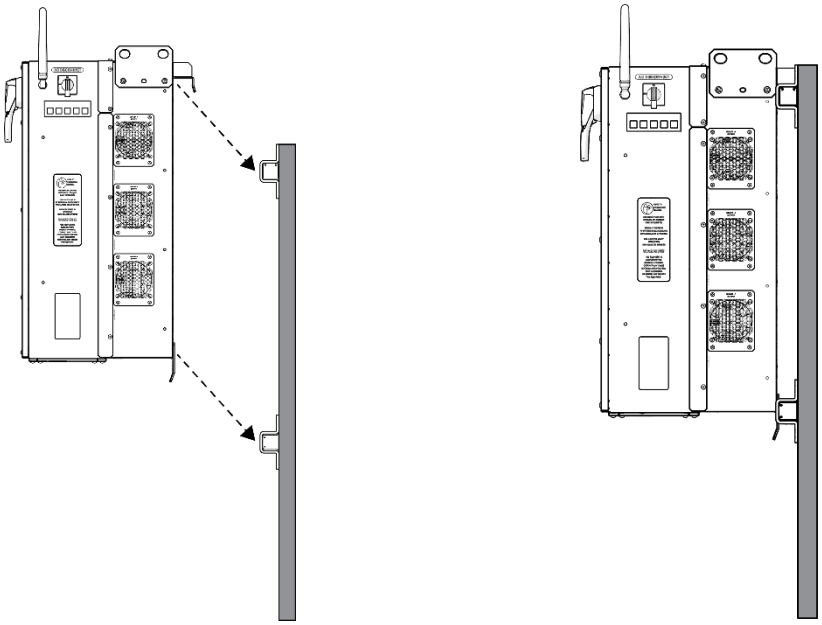

Figure 3-4 Mounting the Inverter to the Strut Channels

When positioned on the strut, the inverter and strut channels should appear as in Figure **3-5**. To secure the inverter in place, use two 8mm ($^{5}/_{16}$ in) bolts (not provided) through the holes provided in the top face of the upper brackets, and two more through the front face of the lower bracket.

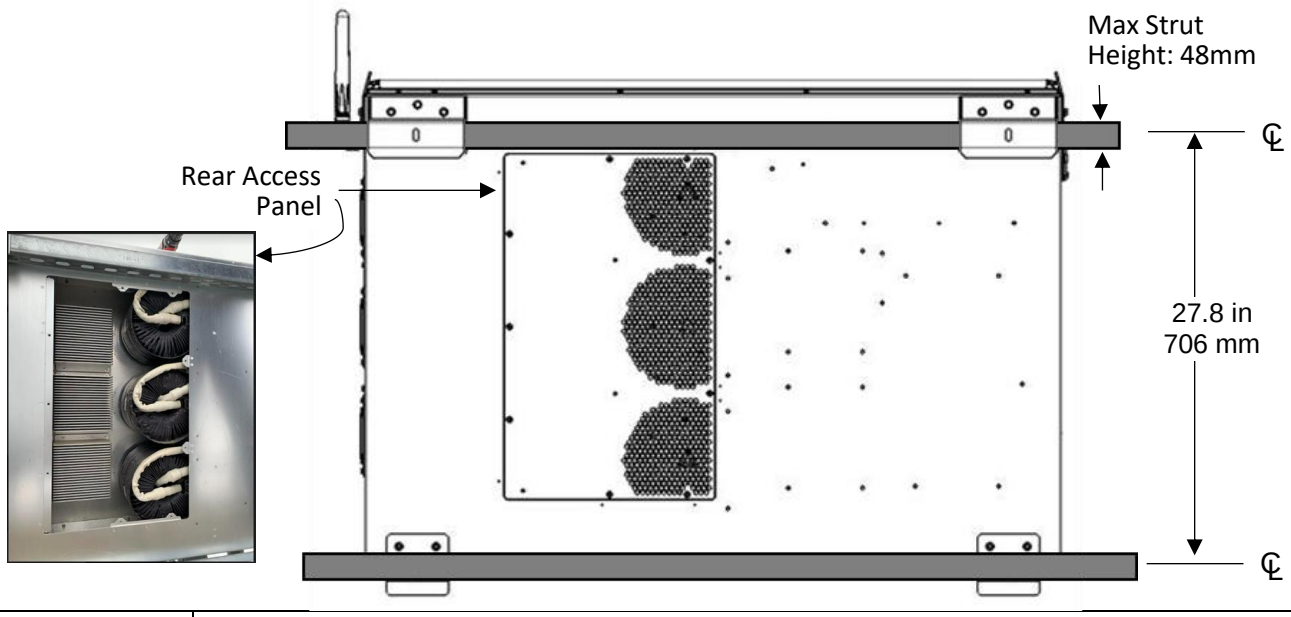

INFO→	**Rear Access Panel Access** Struts MUST NOT BLOCK access to and removal of the Rear Access Panel.

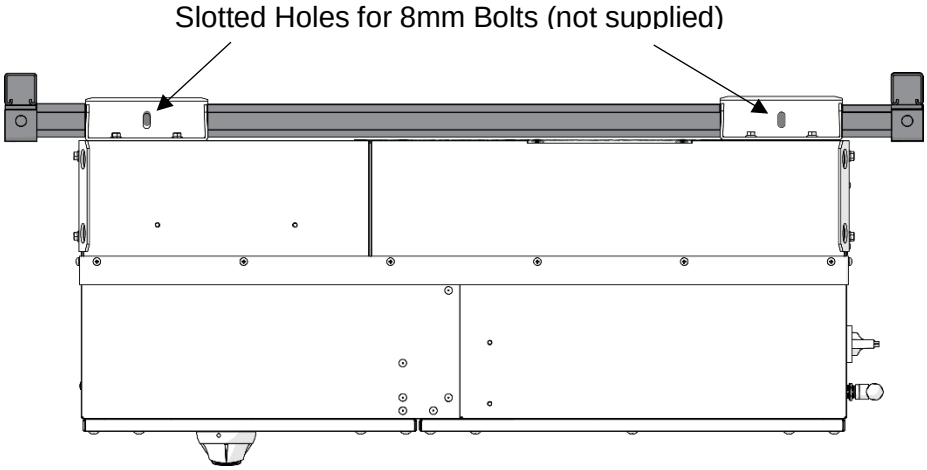

Figure 3-5 Inverter Mounted to Strut Channels, Back View (Upper Image) and Top View (Lower Image)

⚠ CAUTION	**Lifting Heavy Object Hazard** Proper lifting technique must be used in order to avoid injuries. Lifting requires at least two people or a mechanical hoist to install the Inverter.

3.3 Wiring

Turn the Local AC Shutoff Switch to “OFF” before wiring. The Local AC Shutoff Switch is located on the right side of the inverter (Figure 2-3.)

WARNING	**Turn the Local AC Shutoff Switch to “OFF”** Verify the absence of AC voltage.

Use conductors with a temperature rating of 90°C. Terminations are rated for 90°C rated conductors. Ensure that all connections are in compliance with NEC ANSI/NFPA 70 and local electrical codes. With longer wire runs, larger conductors than required by code are often used to reduce the voltage drop. See Section 3.6 for AC connection specifications and Section 3.8.1 for DC connection specifications.

Before wiring, mark locations of conduit entry on the removable gland plate (located on the bottom of the inverter). Remove the gland plate before drilling or punching holes to prevent metal debris from entering the inverter enclosure. Re-attach the gland plate to install conduit fittings and conduit. Keep AC and DC connections in separate conduit. All conduit used for connections must use rain tight or wet location connectors that comply with UL 514B to maintain the enclosure’s Type 4X rating. Conduit holes or other modifications to the enclosure are not permitted anywhere on the enclosure except for the removable conduit panel.

3.3.1 Remove Cover on Wiring Box

Use a #3 Phillips-head screwdriver to remove the 10 screws from the cover of the Wiring Box, as shown in Figure 3-6.

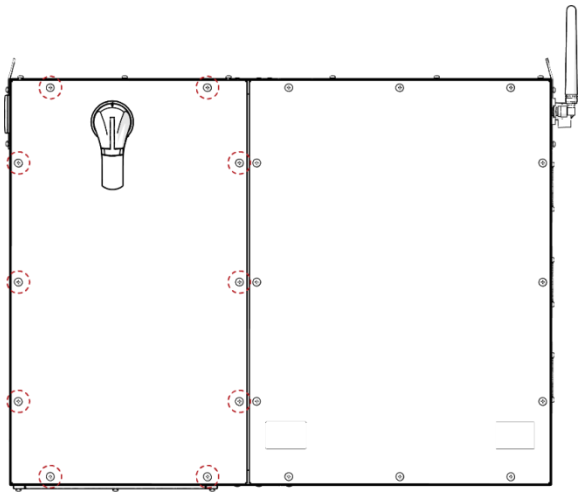

Figure 3-6 Wiring Box Cover Screws (Quantity 10)

WARNING	When replacing the cover, all 10 screws must be installed to maintain the enclosure rating. This prevents water from entering the enclosure that could potentially damage the equipment. Damage due to water is not covered under warranty.

With the cover removed, the inverter is ready for wiring, as shown in Figure 3-7.

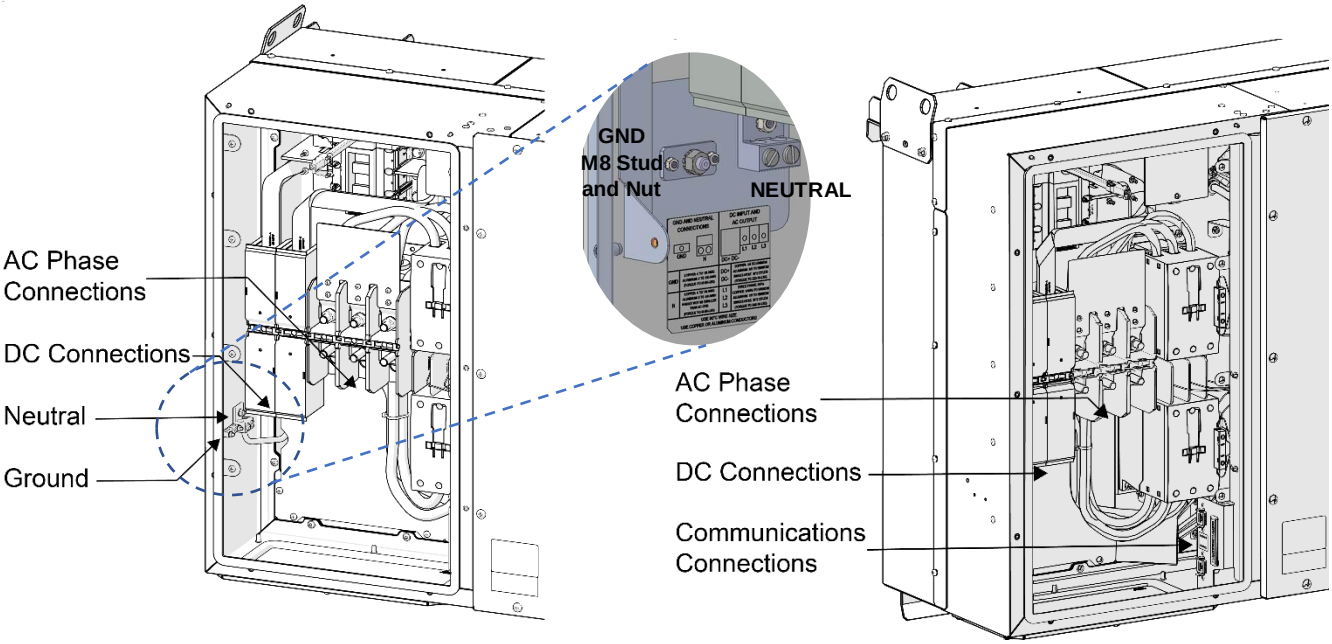

Figure 3-7 Wiring Box Connections

3.3.2 Removable Conduit Panel

All conduit entries must pass through the removable conduit panel. All modifications to the removable panel must occur when the panel is detached from the inverter. This prevents metal shavings and other debris from potentially damaging the inverter. Remove the 10 screws using a #3 Phillips-head screwdriver. When modifications are complete, replace all 10 screws and torque to 25 in-lbs (2.8 Nm).

All modifications to the conduit panel must be contained within the region shown in Figure 3-8. For inverters paired with the attachable combiner box, the removable conduit panels for each require a 2” hole to accommodate the provided conduit and wire assembly. Modify the removable panels so this hole is located as shown in Figure 3-9 for the inverter and as shown in Figure 3-10 for the attachable combiner.

WARNING	Conduits entering the inverter often allow condensation to form inside the inverter enclosure. Use an appropriately rated sealant for these conduits to prevent condensation. Condensation inside the inverter may cause irreparable damage and is not covered under warranty.

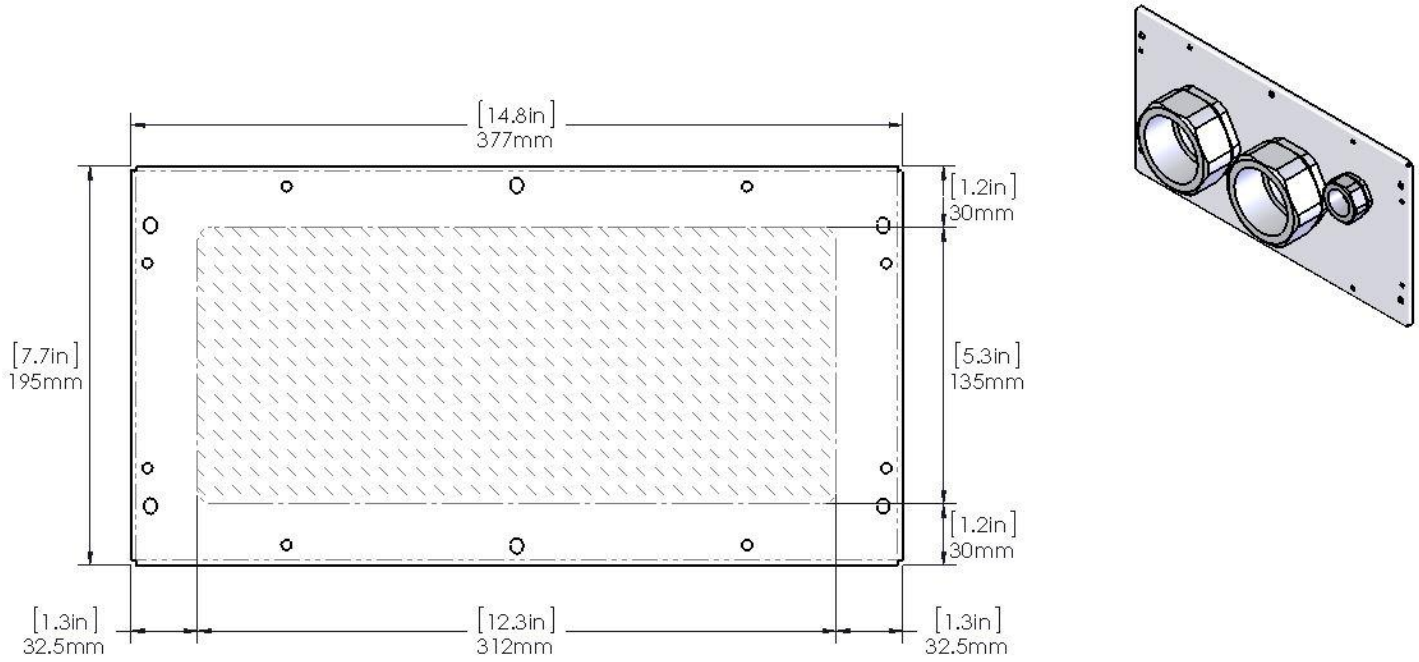

Figure 3-8 Removable Conduit Panel – Entry Locations

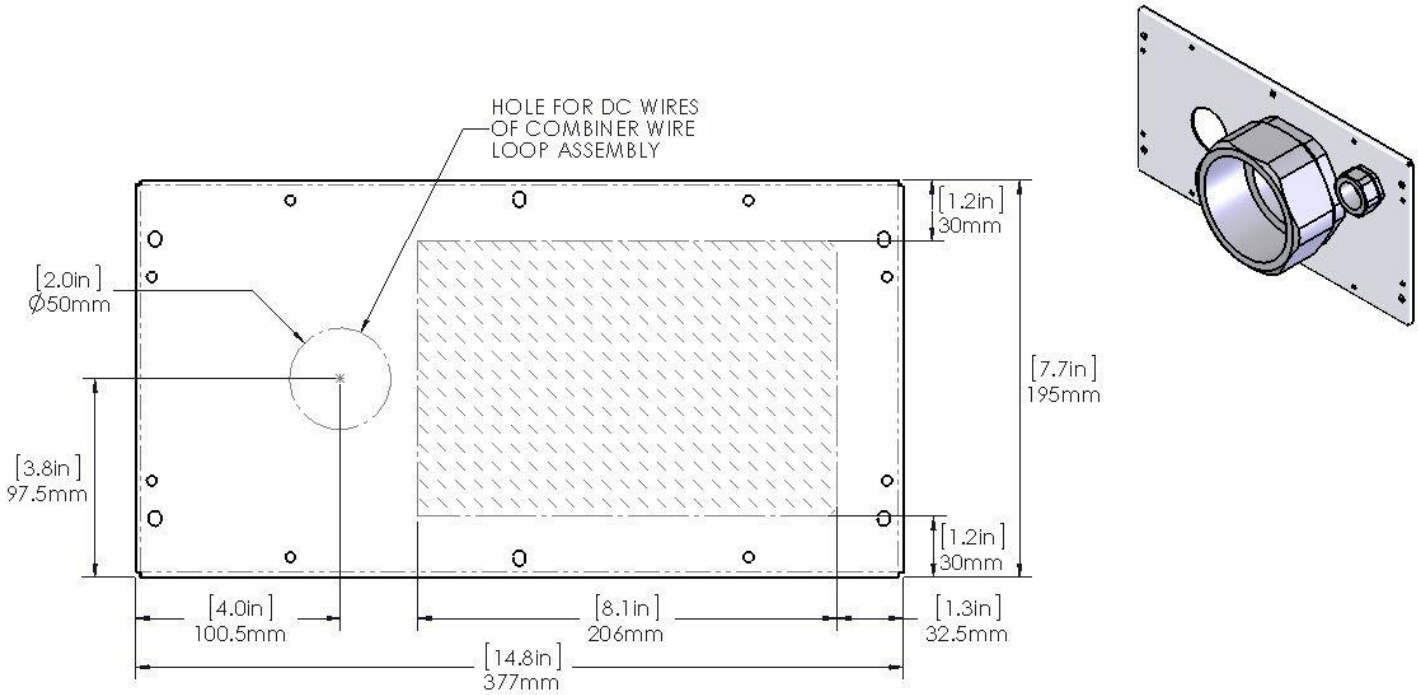

Figure 3-9 DC Conduit Hole Location for Inverters Paired with Attachable Combiners

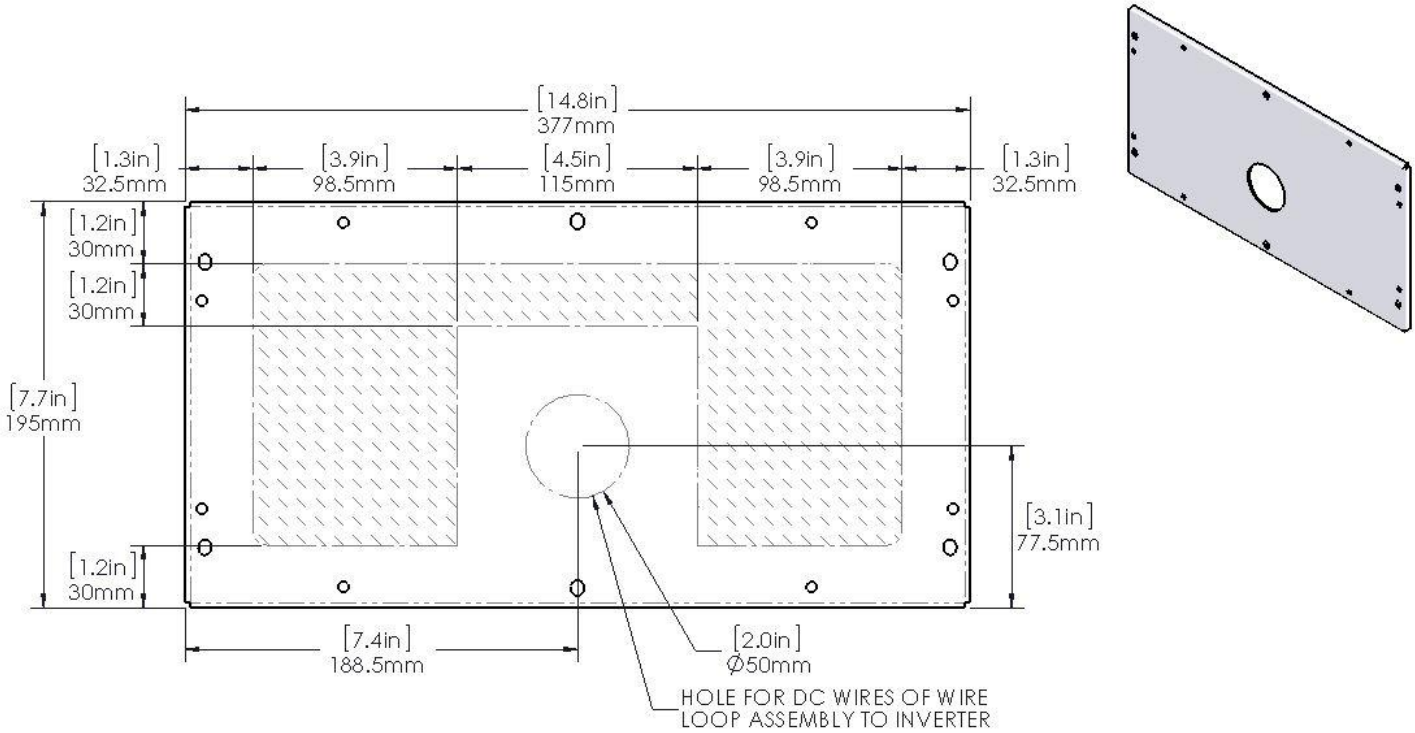

Figure 3-10 Conduit Hole Location for Attachable Combiners

3.4 Transformer Configuration

INFO→	**Grid Mismatch** If the grid does not match the requirements, the inverter will not start and damage may occur. Check with your local electric utility before selecting a grid standard. The system must comply with National Electrical Code ANSI/NFPA 70 and with all local rules and safety regulations before the inverter can be operated.

Yaskawa Solectria Solar's XGI 1500 three-phase transformerless inverters require AC output connection to a wye configured service with a solidly grounded neutral (see Figure 3-11). The XGI inverter leaves the factory with Neutral bonded to Equipment Ground; the Neutral is used by the XGI inverter for AC voltage sensing. Note that the XGI inverter comes with the necessary parts to isolate the Neutral terminal, when that is desired. It is not necessary to run a neutral conductor. However, if a neutral conductor is installed in the field between the service and the XGI inverter, it will not carry current. Therefore, if the installer chooses to run a neutral conductor between the transformer and the inverter, the size of the neutral conductor may be reduced to the same size as the EGC, but not smaller than the EGC. Acceptable service configurations are depicted in the figure below.

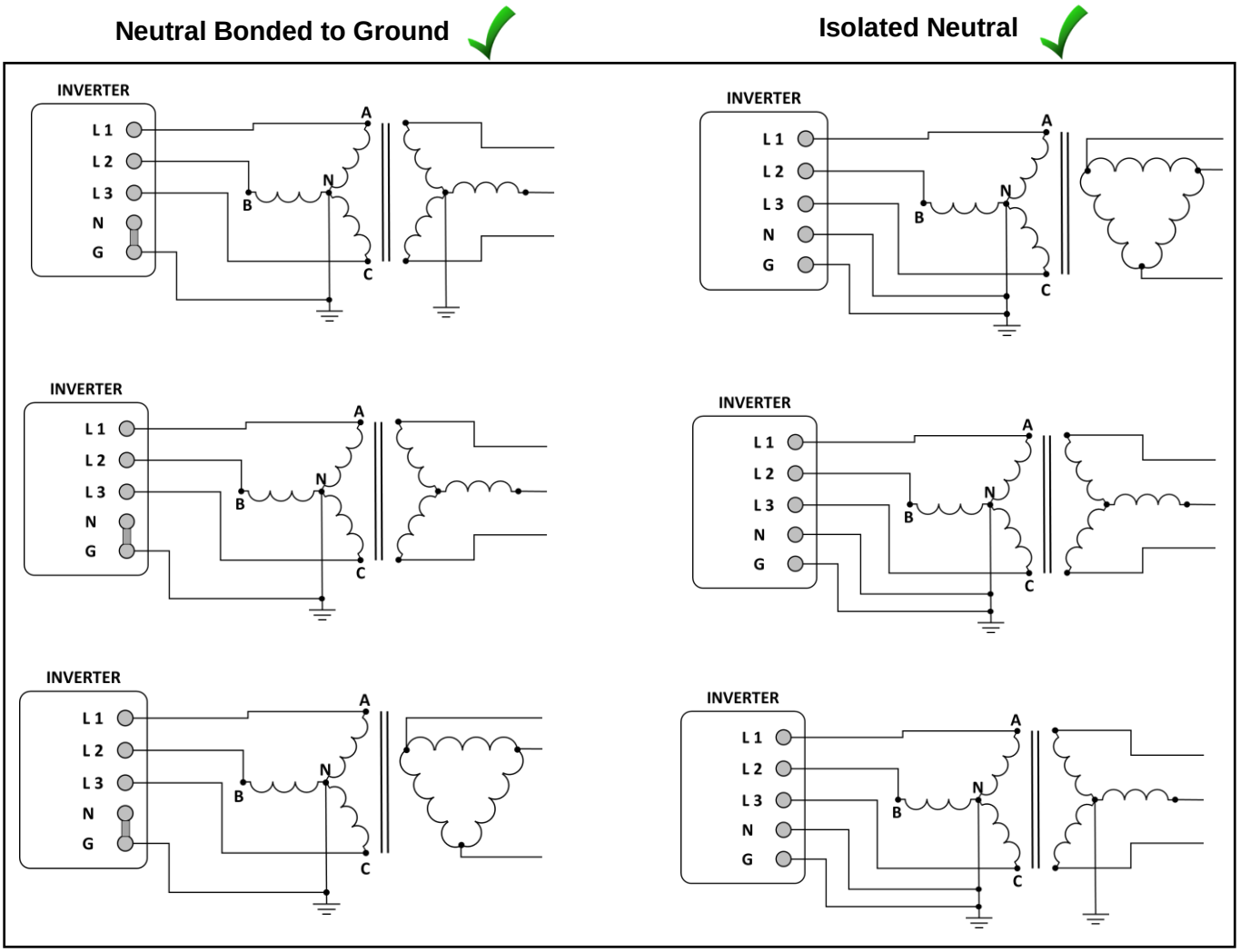

Figure 3-11 Permitted Transformer Configurations

INFO→

Procedure to Isolate Neutral:

1. Remove neutral lug
2. Slip M6 spacer over stud
3. Screw insulating standoff onto stud
4. Screw Neutral lug onto spacer with M6 screw

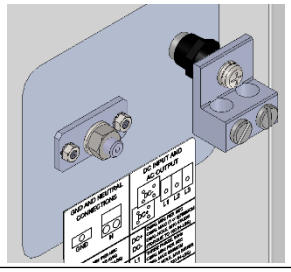

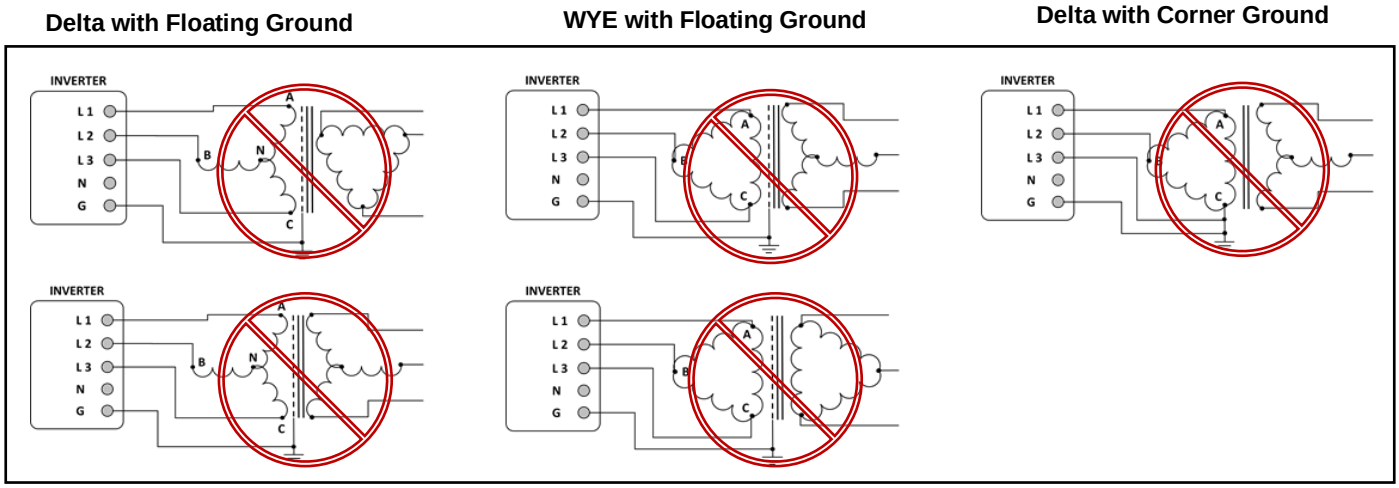

Figure 3-12 Prohibited Transformer Configurations

The XGI 1500 inverter cannot operate connected to a delta service, corner grounded service, or wye with a fully-insulated neutral. For more information please refer to Solectria's application note on this topic: *Interconnection Guidelines for Yaskawa Solectria Solar XGI 1000 and XGI 1500 Inverters.*

⚠ CAUTION	**Improper Transformer Configuration** Inverter will not run and may have hazardous current. Connect transformer in specified configurations only. Incorrect transformer configuration may cause damage to the inverter.

3.5 Equipment Grounding

The XGI 1500 must be bonded using equipment grounding provisions. Do not attempt to ground either DC pole. The XGI 1500 includes provisions for terminating equipment grounding conductors and other conductors used for bonding. One M8 stud with an M8 external-tooth star nut is located inside the inverter wiring section (Figure 3-13). Use a 13mm socket and torque to 90 in-lbs (12.2 N-m). On the exterior of the inverter is an M6 threaded insert (Figure 3-13). Torque this fastener to 39 in-lbs (4.4N-m)

Figure 3-13 Ground Connection Inside and Outside Inverter

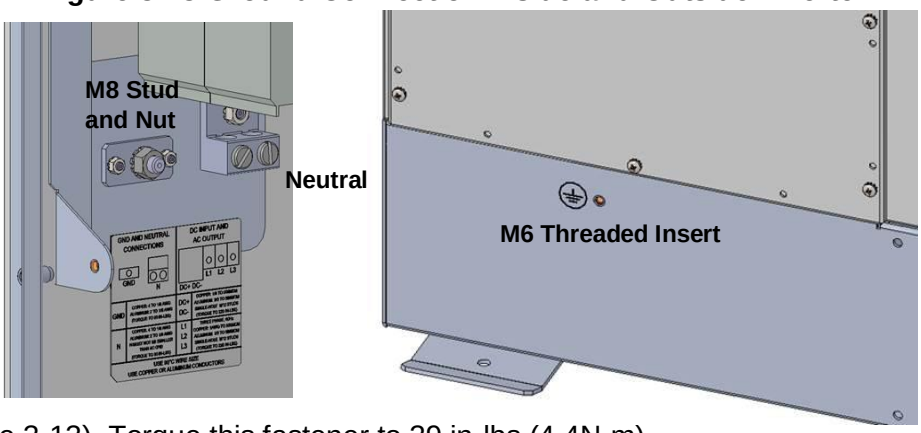

Table 3-1 Grounding and Bonding Connection Specifications

	Material	XGI 1500-125/125	XGI 1500-125/150	XGI 1500-150/166	XGI 1500-166/166
Grounding Conductor	Copper	4 to 1/0 AWG (21.1 to 53.5 mm^2)	4 to 1/0 AWG (21.1 to 53.5 mm^2)	4 to 1/0 AWG (21.1 to 53.5 mm^2)	4 to 1/0 AWG (21.1 to 53.5 mm^2)
	Aluminum	2 to 1/0 AWG (33.6 to 53.5 mm^2)	2 to 1/0 AWG (33.6 to 53.5 mm^2)	2 to 1/0 AWG (33.6 to 53.5 mm^2)	2 to 1/0 AWG (33.6 to 53.5 mm^2)

3.6 AC Connections

The AC connections consist of the 3 AC Phases (L1, L2, and L3), Neutral and Ground. AC wires must be rated for at least 600 VAC. Use wires no larger than shown in Table 3-2, and sized as required to comply with local codes and the National Electrical Code.

Table 3-2 AC Connection Specifications

	XGI 1500-166/166-xx, XGI 1500-150/166-xx **XGI 1500-125/150-xx, XGI 1500-125/125-xx**
AC Output (L1, L2, L3) Conductors	**Maximum Allowed** Cu and Aluminum: 600 kcmil, 1 or 2 conductors with lugs (lug width 42mm or less)
Neutral (Bonded to Ground)	**Range Allowed** Copper: 4 to 1/0 AWG Aluminum: 2 to 1/0 AWG

DANGER	**Electric Shock Hazard** Components with hazardous voltage and energy will electrocute the operator. Ensure AC power doesn't flow into inverter. Verify with a multimeter.

Turn the Local AC Shutoff Switch to "OFF" before wiring. Wire the AC Connections as shown in Figure 3-14.

For the AC connections, use compression lugs with a single hole for a ½ in or M12 stud and sized for the wire gauge used. The width of the lugs must be 42 mm, or less. Torque to 220 in-lbs (25 N-m) using an 18mm socket and torque driver. A hex nut and washer are provided. The terminal block accepts single or parallel conductor sets. See Figure 3-16 for the hardware assembly instructions.

Although a neutral terminal is available on the XGI 1500 inverter, a neutral conductor is not required for inverter operation. The XGI 1500 inverter comes with the neutral terminal bonded to chassis, and it is only used for AC voltage sensing. The XGI 1500 inverter also arrives with a kit for isolating the neutral terminal, when running a neutral conductor is desired. The neutral terminal should be isolated, using the supplied parts, before installing a neutral conductor in the field. Torque the neutral terminal based on the conductor size according to Table 3-3 using either 3/16 Allen hex key or a slot torque driver.

Table 3-3 Neutral Terminal Torque Specifications

	4 AWG (Cu) (42.3 mm^2)	**2-1/0 AWG (Cu or Al) (42.4 to 53.5 mm^2)**
Neutral	50 in-lbs (5.6 N-m)	55 in-lbs (6.2 N-m)

NOTICE	Note: All DC and AC Wiring Connections with crimp lugs must have dielectric jacketing covering the crimp lug.

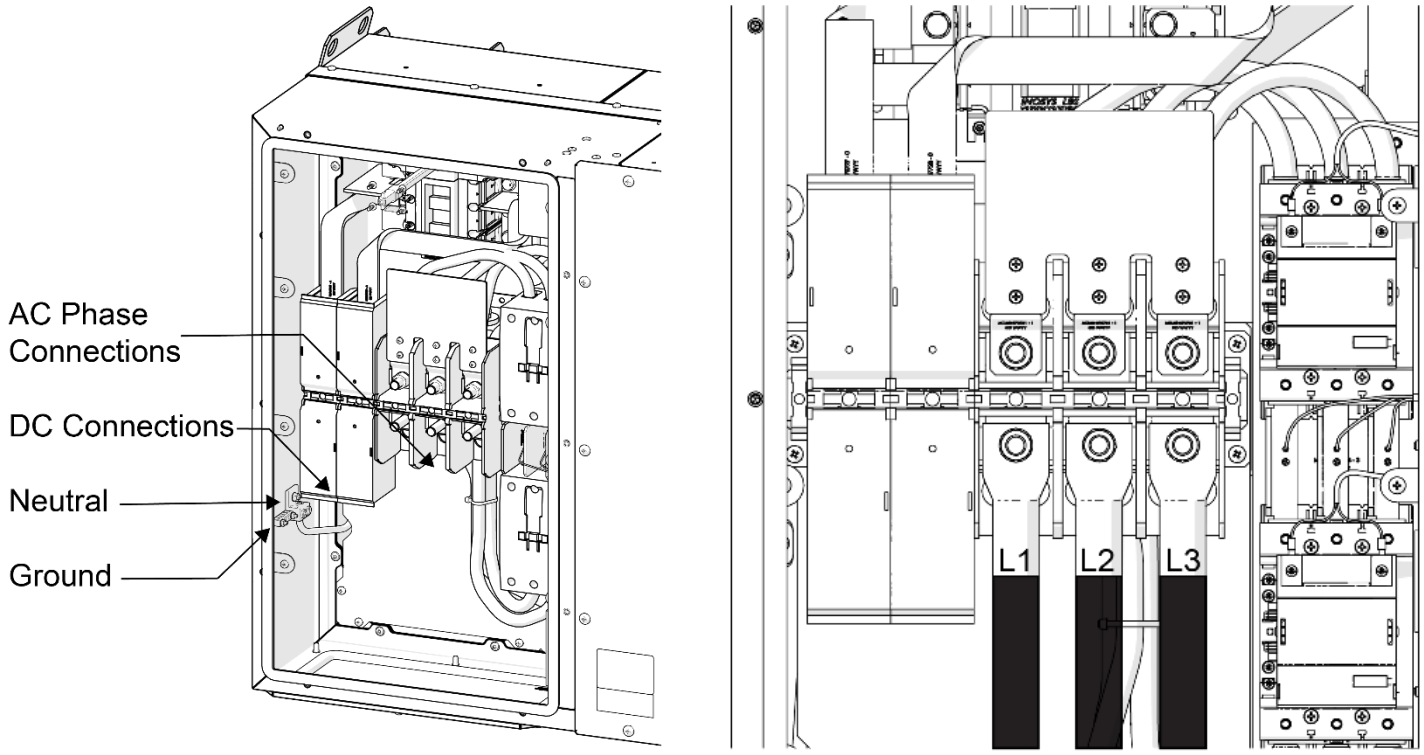

Figure 3-14 AC Connections – Neutral and Ground (Left) and Phases (Right)

For aluminum connections, follow these steps to prepare the wires, one wire at a time.

a) Remove the appropriate amount of wire insulation
b) Use a wire brush to remove the oxidation layer from the aluminum conductors.
c) Immediately apply neutral dielectric grease (such as Noalox) and connect the cable to the terminal.

If the connection is not made within 30 seconds of applying the grease, repeat this process as an oxidized layer may have formed on top of the conductor. An oxidized layer is a poor conductor which could lead to thermal issues, production loss, or damage to the inverter.

Clockwise Phase Rotation: Ensure the inverter is installed with a clockwise phase rotation. A counterclockwise phase rotation will prevent the inverter from running. If the inverter reports a PLL (Phase Lock Loop) error or the frequency/voltage measurements seem incorrect, check your phase rotation. Swapping any two AC conductors will reverse the phase rotation.

3.7 AC Breaker Specifications

The AC output of the Solectria XGI 1500 series inverters requires connection to a 3-pole AC breaker with ratings as specified in Table 3-4.

Table 3-4 AC Breaker Specifications

	XGI 1500-125/125-xx	XGI 1500-125/150-xx	XGI 1500-150/166-xx	XGI 1500-166/166-xx
Minimum AC Breaker Rating	150 A (3 pole, 600VAC)	200 A (3 pole, 600VAC)	200 A (3 pole, 600VAC)	200 A (3 pole, 600VAC)

3.8 DC Connections

The PV source circuits must be combined external to the inverter using equipment such as the XGI Remote Combiner box or the XGI Attachable Combiner box.

3.8.1 General DC Connection Information

The SOLECTRIA XGI 1500 has a single DC input into one MPPT zone.

Perform the calculations based on the total inverter nameplate AC power rating. With the maximum DC/AC ratios shown in Table 3-5, at STC conditions (Equation 3.1), a user can connect up to 332 kWp for all XGI 1500 models. Note for any application that may experience higher than 1000 W/m^2 on a regular basis, a lower DC/AC ratio is recommended. Also, the sum of the Isc rating of all PV source circuits, multiplied by 1.25, must be less than 500 A (Equation 3.2).

$$\frac{kW_{DC}}{kW_{AC}} \leq (1.5, 1.66\ or\ 2.0) \text{ at STC} \quad \textbf{(3.1)}$$

$$\sum I_{SC} * 1.25 \leq 500\text{A} \quad \textbf{(3.2)}$$

NOTICE	**DC/AC Ratio and Isc Requirements** Both the DC/AC ratio and Isc limit requirements must be met. Failure to stay within these limits may result in damage NOT covered under warranty.

3.8.2 DC Input Specifications

Table 3-5 DC Input Specifications

	XGI 1500-125/125	XGI 1500-125/150	XGI 1500-150/166	XGI 1500-166/166
Max Operating DC power	127 kW	127 kW	152 kW	169 kW
Max DC rated power allowed	332 kW	332 kW	332 kW	332 kW
Absolute Max open circuit Voltage	1500 VDC			
Operating voltage	860 - 1450 VDC			
Max power input voltage range (MPPT)	860 - 1250 VDC			
Maximum operating input current	148.3 A	148.3A	178.0A	197.7 A
Maximum PV Current (Isc x 1.25)	500 A			
Maximum Allowed DC to AC Ratio	2.6	2.6	2.2	2.0

WARNING	**Risk of Electric Shock or Fire** Use only with PV modules, DC conductors, switches, fuses, and fuse holders with a maximum system voltage rating of 1500 VDC or higher.

3.8.3 Fuses Configuration and Sizes

Refer to Table 3-6 for information regarding fuse sizes and configuration.

Table 3-6 Attachable Combiner Box

Number of DC Inputs	16, 20, 24, 26, 28
Fuse Rating Options	15 A, 20 A (16, 20, 24, 26 or 28 positions) 25 A (20 positions), 30 A (16 positions)
Fuse Configuration	Both Poles Fused
Switch Configuration	Both Poles Switched
WARNING	**Open Fuse Holders** Verify the absence of DC voltage and current when inserting or removing fuses.
NOTICE	**Use Correct Fuses** Size the fuses following NEC requirements.

Only replace fuses in the CR1500 or CA1500 PV Combiner with fuses of the same rating, chosen from this list of approved 1500Vdc fuses.

FUSE RATING	MANUFACTURER / MODEL		
	MERSEN	LITTELFUSE	EATON / BUSSMAN
15A	HP15M15	SPXV015	PV-15A10F85L
	HP15M15R		
20A	HP15M20	SPXVO20	PV-20A10F85L
	HP15M20R		
25A	HP15M25	SPXV025XM	PV-25A10F85L
	HP15M25R		
30A	HP15M30	SPXV030XM	PV-30A10F85L
	HP15M30R		
32A	HP15M32	SPXV032XM	NA
	HP15M32R		

Table 3-7 Approved Replacement Fuses – Do Not Substitute

3.9 DC Connection Using the XGI Remote or Attachable Combiner

Wire the DC Connections as shown in Figure 3-15 using the wiring shown in Table 3-7.

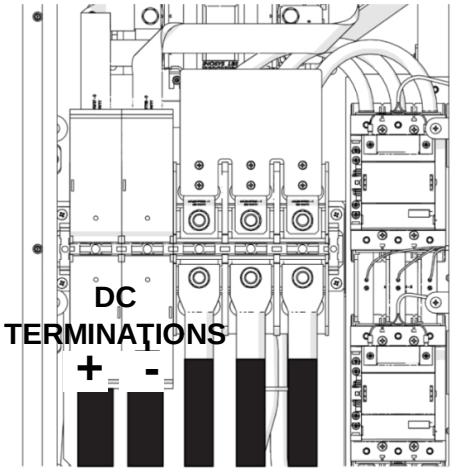

Figure 3-15 DC Connections from a CR1500 Remote Combiner

Table 3-7 DC Input Wire Size

Models	XGI 1500-125/125-xx, XGI 1500-125/150-xx, XGI 1500-150/166-xx, XGI 1500-166/166-xx
Wire Size Range	Cu or Al: Min: per NEC Cu or Al: Max: 600 kcmil (240 mm^2), 1 or 2 conductors with lugs

For the DC connections, use compression lugs with a single hole for a ½ in or M12 stud and sized for the wire gauge used. The width of the lugs must be 1.5 in (38 mm) or less. Torque to 220 in-lbs (25 N-m) using an 18mm socket and torque driver. A hex nut and washer are provided. See Figure 3-16 for the hardware assembly instructions.

The DC terminal accepts one or two (parallel) conductors. These may be one or two conductors from a single PV combiner box, or two conductors: one from each of two separate PV combiners. Figure 3-16, on the left, shows the fasteners for a single conductor connection, and on the right for two conductors. Note that the crimp lugs are stacked flat-to-flat for the parallel conductor connection.

NOTICE	Note: All DC and AC Wiring Connections with crimp lugs must have dielectric jacketing covering the crimp lug.

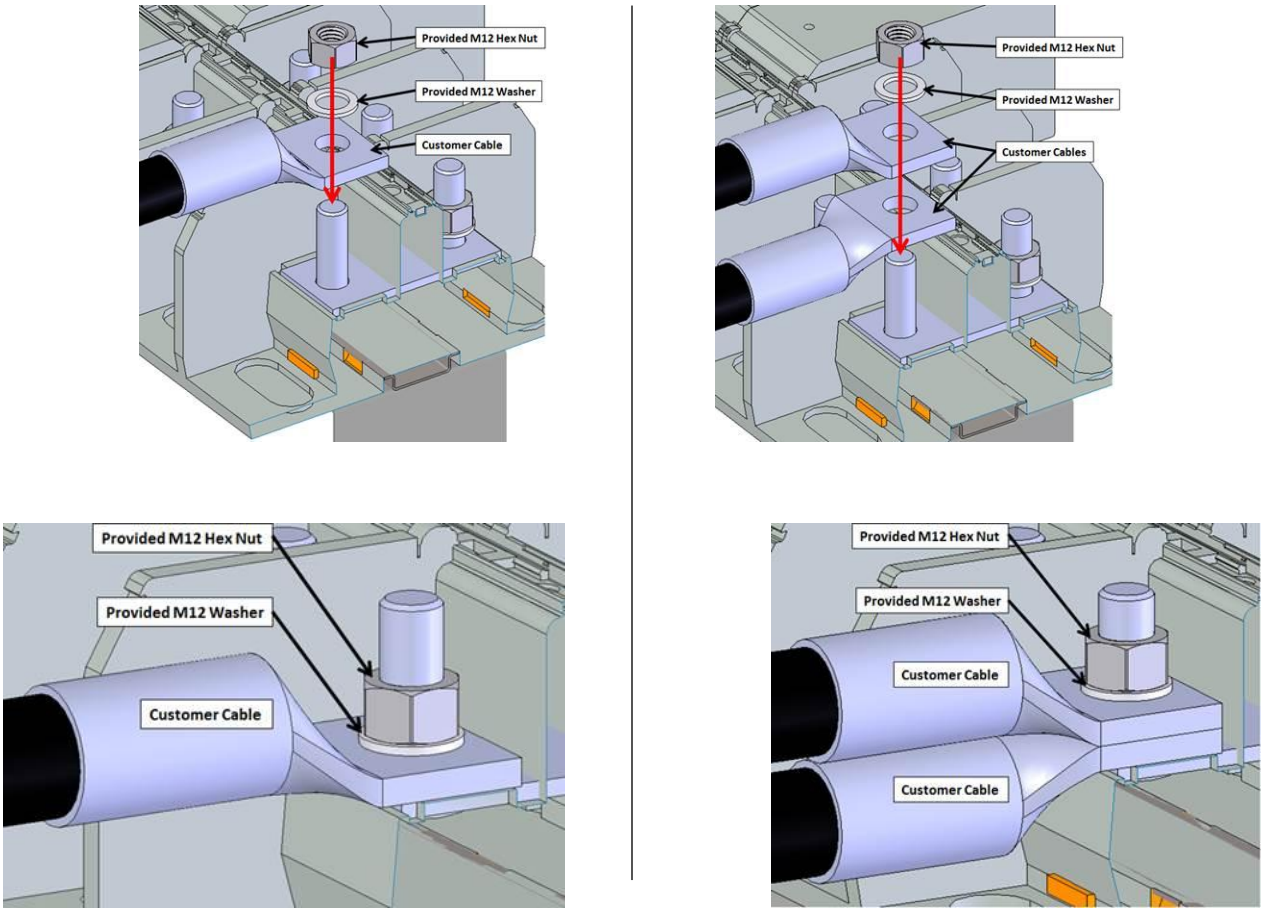

Figure 3-16 Installation of Single or Parallel Conductor Sets

3.10 DC Connection Using the XGI Attachable Combiner Box

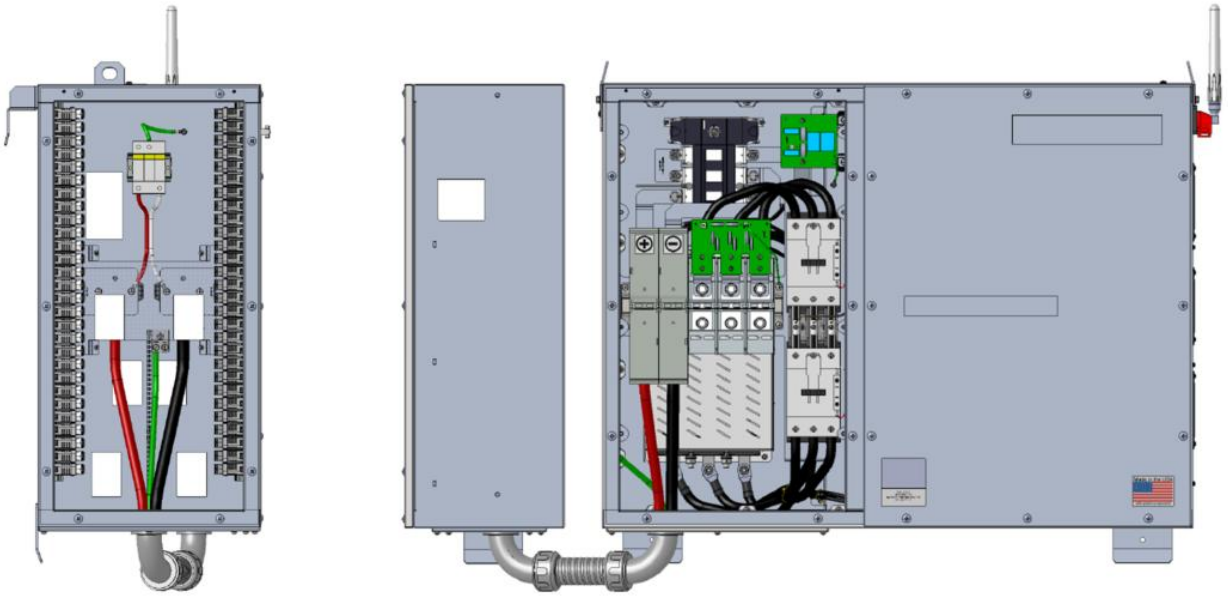

Figure 3-17 XGI 1500V with Attachable Combiner Box Option

DANGER	**Electric Shock Hazard** Components with hazardous voltage and energy pose the risk of electrocuting operators. Verify the absence of DC voltage and current.
WARNING	**Turn DC Switch to OFF** Verify the absence of DC voltage and current.
NOTICE	**Check Polarity of DC Inputs** DC inputs with the wrong polarity may cause damage to inverter. Confirm proper polarity of connections with a multimeter.

The PV Output Circuit Wiring Harness Assembly is designed to simplify the field interconnection of the Combiner and the XGI 1500 inverter. The Wiring Harness Assembly comprises:

- A straight section of 2-inch PVC about 7-inches in length, with 90-degree elbows and threaded couplings at each end
- Two (2) 4/0 AWG conductors for the PV Output Circuit overall positive (red) and overall negative (black), with lugs crimped on the ends of the wires to facilitate termination on posts in the Combiner and the XGI 1500 inverter, and
- A 4AWG green equipment ground wire, with stripped ends for easy termination at the busbars in the Combiner and XGI 1500 inverter.

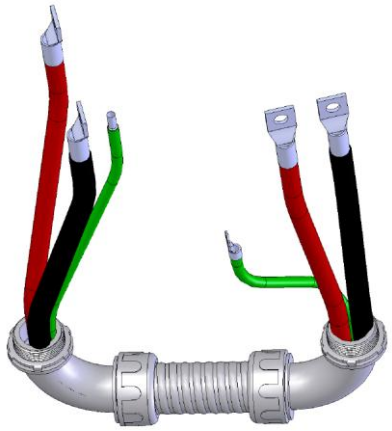

Crimp lugs for terminations on posts in Combiner and XGI wiring compartment.
(2) 4/0 AWG, RHW-2 2000V 90°C Cu
GND #4 AWG, RHW-2 2000V 90°C Cu
Red = positive, black = negative

2-inch LFNC with 90-degree elbows and threaded couplings

Figure 3-18 PV Output Circuit Wiring Harness Assembly

1. Confirm that the DC Switch and Local AC Shutoff Switch on the XGI 1500 are “OFF”, and all fuse holders in the Combiner are in the OPEN position, with fuses removed.
2. Feed the conductors of the Wiring Harness Assembly through the openings in the Combiner and XGI 1500 wiring compartment, and position the conduit up against the bottoms of the enclosures. A slight adjustment of the position of the Combiner may be necessary to align the conduit perfectly.
3. From inside the enclosure, feed the conductors through the mating threaded fitting, then thread the fitting into the conduit coupling to secure the conduit assembly in place, in both enclosures.
4. Proceed to terminate the PV Output Circuit conductors to the lugs, noting carefully the polarity markings on the terminations and insulation color coding: **Red** = POSITIVE, **Black** = NEGATIVE.
5. For terminations in the inverter wiring section, torque the positive and negative terminals to 220 in-lbs (25 N-m) and the ground terminal to 90 in-lbs (10.2 N-m)
6. For terminations in the combiner box, torque the positive and negative terminals to 90 in-lbs (10.2 N-m) and the ground terminal to 50 in-lbs (5.7 N-m)
7. Replace the cover on the XGI 1500 wiring compartment. Completed wiring should appear as in Figure 3-17.

NOTICE	**Shutdown Procedure** DO NOT DISCONNECT A PV COMBINER WHEN THE SYSTEM IS OPERATING. To prevent potential damage to the inverter from a voltage spike, shut down the system following these steps: 1. First: turn the Local AC Shutoff Switch on the inverter to “OFF”. 2. Second: turn the DC switch on the inverter to “OFF”. 3. Last: disconnect the PV Combiner(s)

3.11 Conduit Sealing

All conduit entrances must be sealed with conduit foam. Ensure to use a product that is listed for use in electrical applications. Polywater ® ATF™ Spray Foam Sealant is an excellent option. Follow the manufacturer's recommendations when sealing conduit entrances.

WARNING

Condensation and Water Ingress Will Cause Damage: The Solectria XGI 1500 inverter has a NEMA 4X, Type 3R, IEC IP66 enclosure. If not properly installed, or if not properly maintained during extended periods of sitting idle (non-operating), all NEMA 4X, Type 3R, IEC IP66 enclosures are susceptible to water ingress and condensation that will damage critical components.

IMPORTANT: After sealing the conduit entrances, the risk of condensation increases when the XGI 1500 inverters are inoperative for an extended period of time. Inverters often sit idle for an extended period between the initial installation and the commencement of normal, autonomous daily operation. Follow these guidelines:

Manage Moisture During Extended Down-Time (non-operating inverter for more than 1 week)

- Extended periods of down-time can occur, for example, if turn-on/start-up is delayed more than one week following initial installation, or if the inverter is idle for more than a week during a service event. For any reason, if an inverter will be idle for longer than one week, install a desiccant pack inside the inverter. See Fig. 3-19 below for placement and orientation of the desiccant pack inside the inverter.
- For long idle periods, visit the inverter at least once per month to inspect the desiccant, remove all moisture inside the inverter, and replace the desiccant pack as necessary.
- Before turn-on/start-up following a period of down-time, inspect the inverter, remove all moisture inside the inverter, and remove the desiccant pack and any debris.
- Desiccant packs are only intended to protect the inverter from moisture during periods of down-time, and *should not be left inside an operating inverter*.

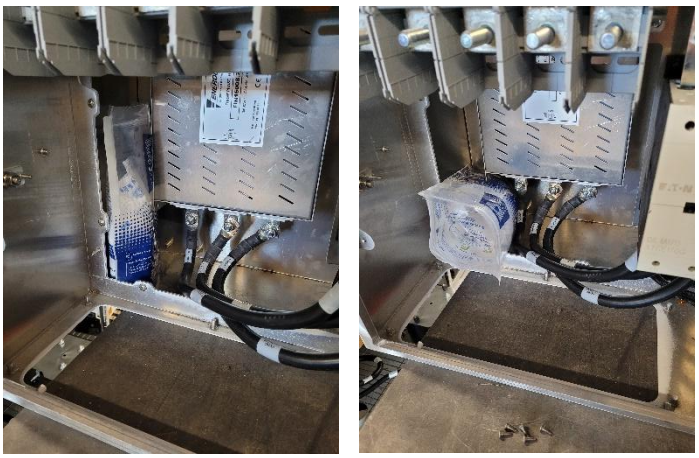

Recommended Desiccant

Dry & Dry 500gram SPECIAL Orange Indicating Packets

www.dryndry.com

Figure 3-19 Proper Location and Orientation Options for the Desiccant Pack

WATER INGRESS WILL VOID WARRANTY: It is the responsibility of the installer to maintain a dry, moisture-free inverter enclosure; water ingress is not covered under warranty.

3.12 **Antenna Mounting**

Mount the antenna as shown in Figure 3-2020. The antenna works best when oriented vertically.

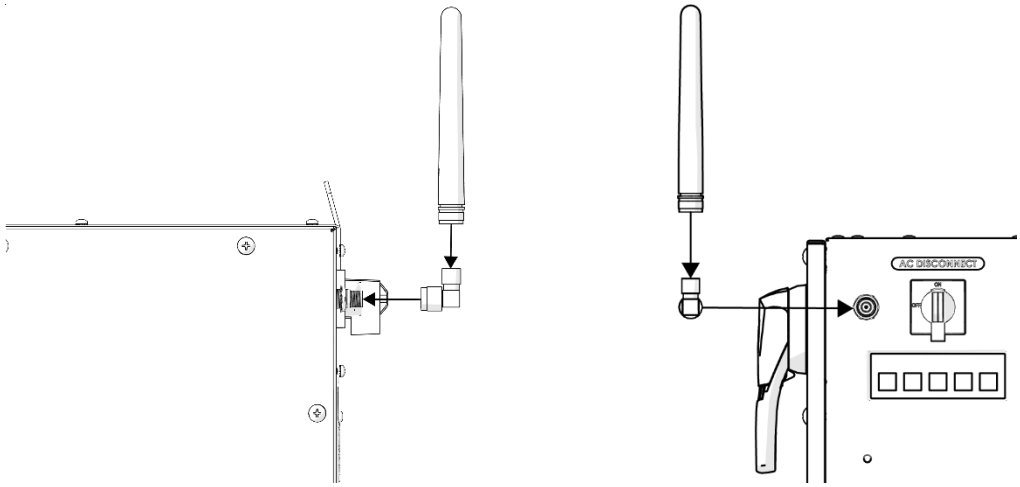

Figure 3-20 Mounting the Antenna

3.13 **Replace Wiring Box Cover**

Put the cover back on the inverter. Use a #3 Phillips head torque driver to tighten the cover screws to 40 in-lbs (4.5 N-m). Refer to Figure 3-6

INFO→	**Torque to Specified Value** Overtightening the screws may warp the cover or strip the screws.

⚠ WARNING	When replacing the cover, all 10 screws must be installed to maintain the enclosure rating. This prevents water from entering the enclosure that could potentially damage the equipment. Damage due to water is not covered under warranty.

4 Startup and Verification Test

WARNING	**Electrical Shock Hazard** Installer may come into contact with components that have hazardous voltage and energy. Use proper safety equipment when energizing the inverter.

4.1 Startup Checklist

Mechanical Installation

- ❑ Make sure the inverter is securely installed and all mounting fasteners are tightened to the specified torque values. See Section 3.2 Inverter Size, Spacing and Mounting

Electrical Connections

- ❑ Turn the Local AC Shutoff Switch on the inverter to “OFF”.
- ❑ Turn the DC Switch on the inverter to “OFF”.
- ❑ Verify all conductors are landed on the correct terminals.
- ❑ Verify all connections are tightened to the specified torque values. See Section 3.6, 3.8 and 3.9.
- ❑ Verify conduits from underground circuits are appropriately sealed

Electrical Check

- ❑ Verify that the AC circuit breaker is appropriately sized. Refer to Section 3.6.
- ❑ Test whether the AC voltage is within 5% of nominal (570V-630V).
- ❑ Verify that the AC phase conductors are oriented for clockwise phase rotation.
- ❑ Test the polarity of the DC inputs. See Sections 3.8 and 3.9.
- ❑ Verify that the DC open circuit voltage of the input PV circuit is less than 1500VDC.

4.2 Startup Steps

Follow these instructions when energizing the unit:

- ❑ Verify inverter wiring compartment cover is installed and secured using all fasteners.
- ❑ After completing the electrical connections and electrical checks, energize the site AC Breaker to connect grid AC voltage to the inverter.
- ❑ Connect the PV source circuits to the combiner and energize the PV output circuit from the combiner to the SOLECTRIA XGI 1500 wiring box DC terminations.
- ❑ Turn the Local AC Shutoff Switch on the inverter to “ON”.
- ❑ Turn the DC switch on the inverter to “ON”.
- ❑ Verify that the Status Panel illuminates READY and that neither the MAINTENANCE nor POWER FAULT LED is illuminated. If the LEDs are not in this state, see Section 9 Maintenance and Troubleshooting.

- ❑ Connect to the XGI virtual HMI. Using a laptop, tablet, or smartphone, connect to the gateway inverter's WiFi network, XGI-00-006 (see Section 5 User Interface).
- ❑ Select the gateway node (in blue) at the top of the list.
- ❑ Log in to the inverter (see Section 6.2.5).
- ❑ Select the "First Time Start Wizard" from the menu under "Inverter Configurations".
- ❑ Follow the instructions of the "First Time Start Wizard". (See Section 8.1)
- ❑ Verify that the Status Panel illuminates READY, NETWORK and COMMUNICATIONS, and POWER.
- ❑ Verify that the inverter is operational by checking production using the virtual HMI or a third-party DAS.

4.3 Commissioning Test

- ❑ Turn the Local AC Shutoff Switch located on the right side of the inverter to "ON".
- ❑ Turn the DC switch using the handle on the front of the inverter to "ON".
- ❑ Use the HMI to verify that settings for voltage protection, frequency protection, and autonomous grid support functions if applicable, are properly configured and compliant with the interconnection agreement.
- ❑ Connect a power quality analyzer, oscilloscope, or other digital voltage measurement device on the inverter side of the PV system disconnect. The PV system switch is typically the disconnecting means closest to the point of interconnection. The meter is used to verify voltage and timing requirements during plant shutdown.
- ❑ Once all inverters are operating at a convenient and available power level, open the PV system disconnect. The inverters are expected to cease operation once the PV system disconnect is open. Listen for the sound of the AC contractors opening inside the inverters.
- ❑ Verify using the meter on the inverter side of the PV system disconnect the absence of voltage within 10 line cycles (0.16s).
- ❑ Verify using the XGI virtual HMI absence of grid error message and cessation of power production. This information is available on the inverter list page and inverter home page.
- ❑ Close the PV system disconnect. Verify that voltage has resumed within 5% of nominal.
- ❑ Using the XGI virtual HMI, verify initiation of a 5-minute timer before resuming operation. This information is available on the inverter list page and inverter home page.
- ❑ The commissioning and verification test is complete once the inverters have resumed operation 5 minutes after reconnecting the PV system disconnect.

5 Communication Installation and User Interface

The SOLECTRIA XGI inverters utilize an advanced communication platform that can be accessed over WiFi using a smart device, or over Ethernet using a PC.

The SOLECTRIA XGI inverters are compatible with Solectria's SolrenView with no additional hardware required. Yaskawa Solectria Solar also supports integration with other third-party monitoring platforms.

This section includes important information regarding communication design requirements, wiring requirements, and installation instructions.

5.1 Connection to the Internet

Connection to the Internet is strongly recommended for SOLECTRIA XGI inverters. An internet connection will provide the user with several important features including:

- ✓ Automatic firmware updates.
- ✓ Remote diagnostics & troubleshooting.
- ✓ Access for Yaskawa Solectria Solar Technical Support & Service.
- ✓ Access to the user interface via the Remote Access Portal (RAP) (with subscription, optional).
- ✓ Remote monitoring via SolrenView (with subscription, optional).

5.2 Communication Conductors

All communication conductors must utilize **Ethernet Cat 6 Shielded cable**. The shield must be terminated properly to provide connection with ground.

INFO ✓
Ethernet Cat 6 Shielded Cable: Solar PV inverters create an electrically noisy environment that can disrupt inverter communication. It is important to use Cat 6 Shielded cable to ensure that communication is not interrupted. **Separate Communication Conductors from Power Conductors:** Never run communication conductors in the same conduit as power conductors. It is important to keep communication conductors away from power conductors to reduce noise. If power conductors must intersect with communication conductors, it is preferable to have the intersection at a 90 degree angle.

5.3 Connecting Multiple Inverters

The SOLECTRIA XGI inverters can be connected in groups referred to as ***Clusters.*** Each XGI Inverter Cluster is defined as a group of inverters connected over Ethernet with one ***Gateway Inverter*** connected to the onsite LAN***.*** The Gateway Inverter is automatically self-configured when it obtains a DHCP address from a DHCP server or when it can be manually programmed using a static IP. Once the Gateway Inverter is configured, the Cluster becomes its own private LAN or **Cluster LAN** protected by a built-in firewall. DHCP or manual static IP configuration is required to form multiple clusters on a single LAN.

XGI Inverters can be clustered using Ethernet daisy chains (Figure 5-1), mixed networks using Ethernet switches (Figure 5-2), or any combination to form a multi-cluster configuration (Figure 5-3).

- The maximum number of inverters in any single daisy chain is 50 inverters.
- When using star or mixed network configurations, the maximum number of inverters from one end of a daisy chain to the end of any other daisy chain within a given Cluster must not exceed 50 inverters.

- The maximum number of inverters in any Cluster must not exceed 50.
- Use shielded Cat6 Ethernet cable ONLY.
- The maximum length between any two devices is 328 ft. (100m) for all inverter Ethernet connections.
- Fiber optic cables can be used for 'long-haul' communication runs with the use of an appropriate switch/converter.

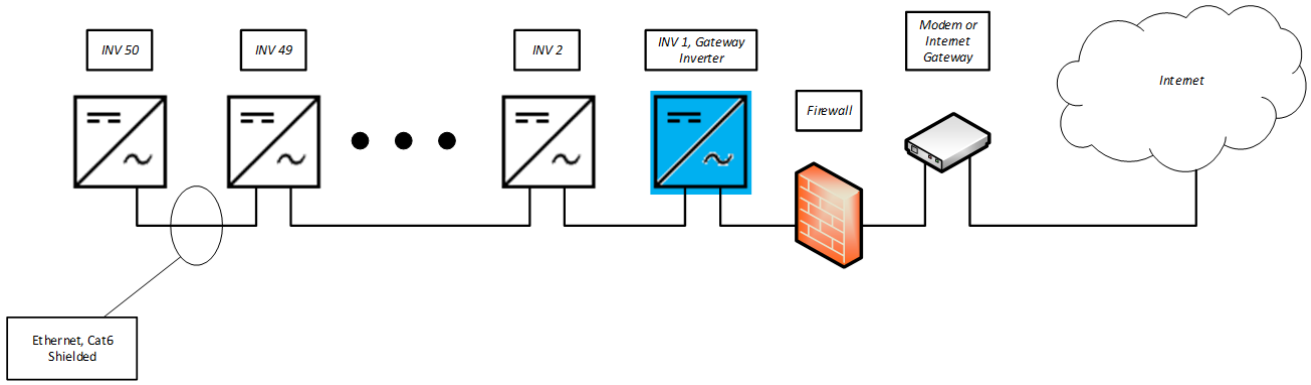

Figure 5-1 Ethernet daisy chain

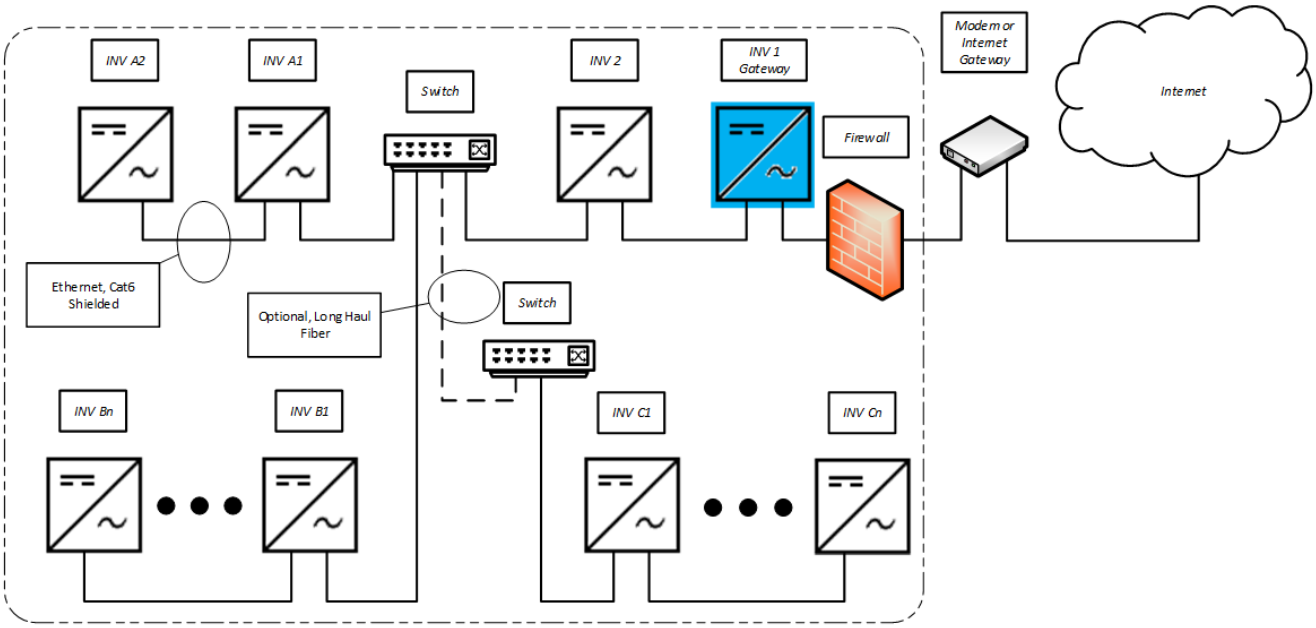

Figure 5-2 Mixed network

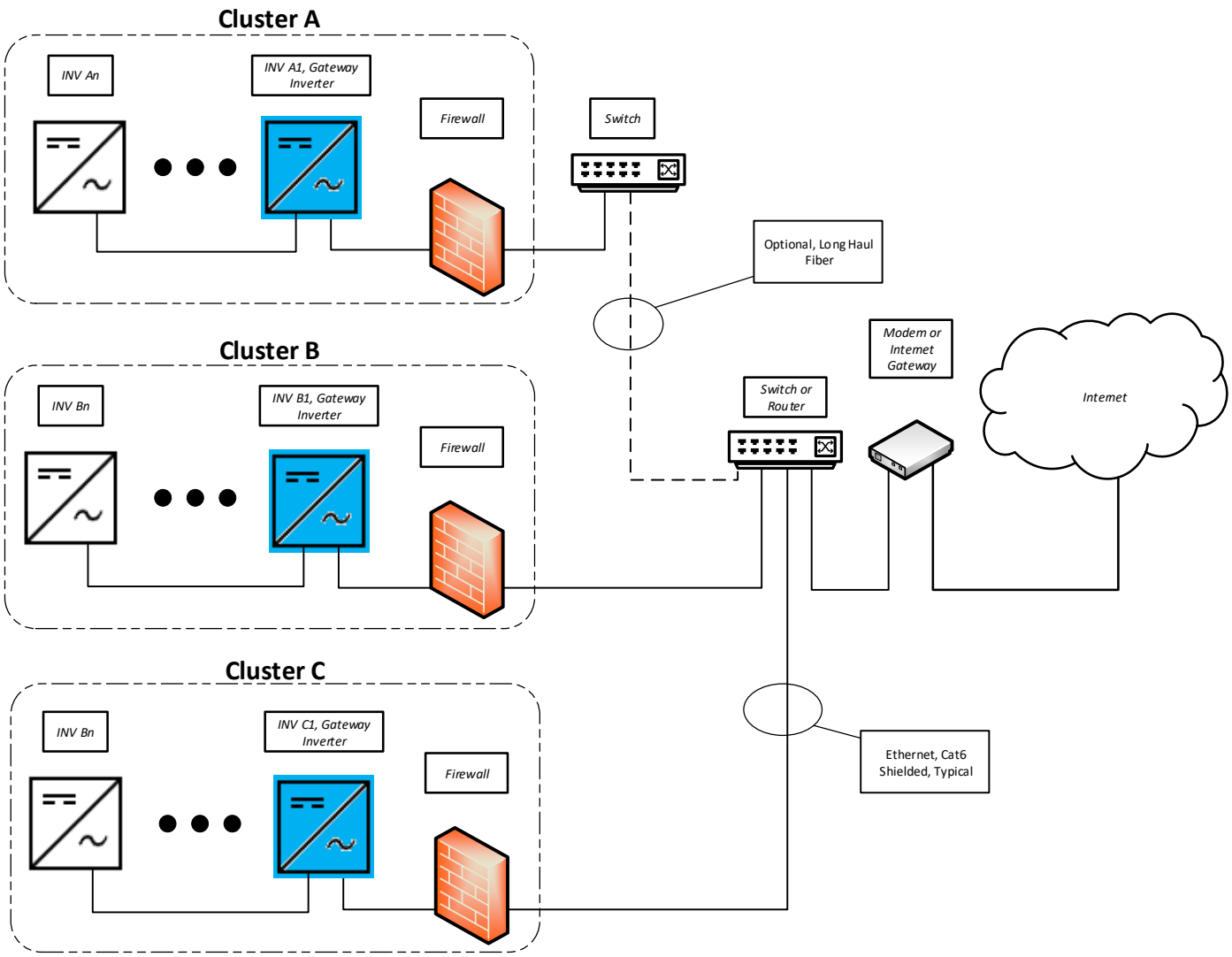

Figure 5-3 Multi-Cluster site

5.4 XGI Gateway Inverters Firewall

SOLECTRIA XGI inverters have a robust built-in firewall that is automatically established on the Gateway Inverter after receiving an IP address assigned via a DHCP or through manual static IP configuration. This act of establishing a firewall also designates an inverter as a **Gateway Inverter**. Once this firewall is established, unauthorized inbound or outbound communication is not permitted through the Gateway Inverter.

5.5 Networking with Other Devices

Networking with other Ethernet based devices including revenue grade meters, tracking systems, weather stations, etc. should only be done outside of the inverter Cluster LAN, or outside of the Inverter Gateway Firewall; see Figure 5-4.

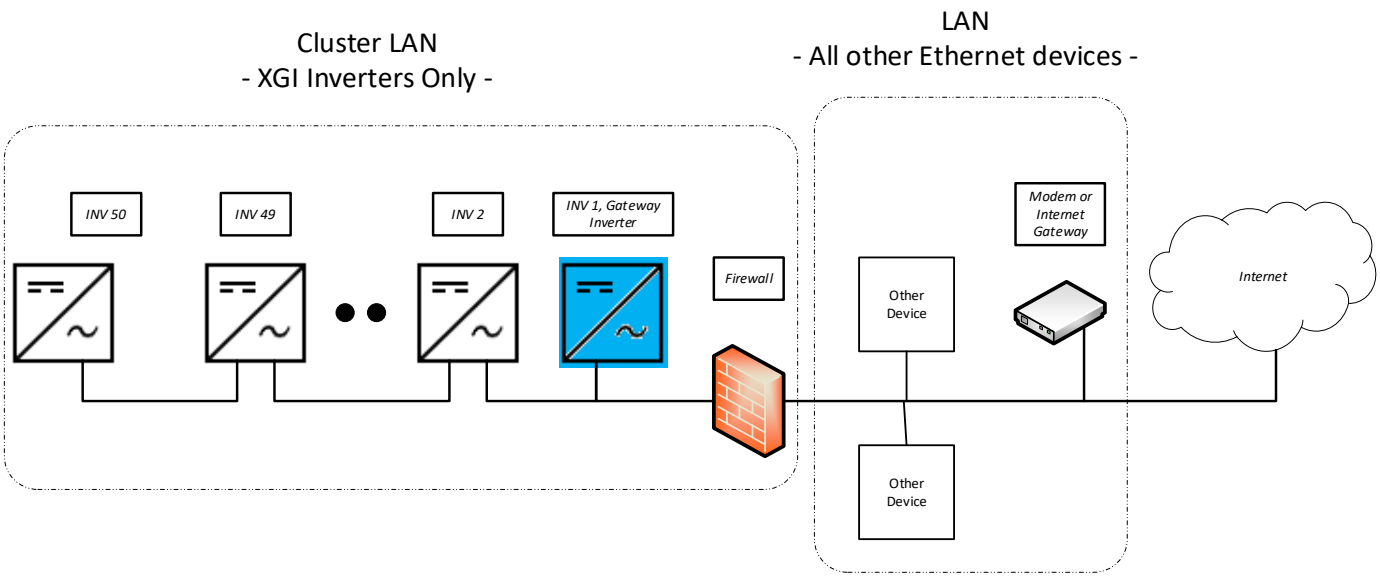

Figure 5-4 Networking with Other Devices

5.6 Monitoring Compatibility

The SOLECTRIA XGI is compatible with SolrenView and third-party Data Acquisition Systems (DAS). When using SolrenView monitoring no additional hardware is required. When connecting with third-party monitoring providers, Ethernet connections must be used; RS485 is **not** supported.

When integrating SOLECTRIA XGI inverters with third-party monitoring platforms, one of the following methods MUST be employed in order for the third-party DAS to reach each inverter as an Endpoint Device: 1. Port forwarding, 2. Static Routing (discussed in detail in Section 5.7). Be sure to consult with the monitoring provider before installation.

5.7 Third-Party Data Acquisition System (DAS) Connection

NOTICE !
Ethernet Only Connection: The XGI 1500 series inverter only supports Ethernet connections to a third-party DAS.

Connect the third-party DAS to the onsite LAN, outside of the Cluster LAN(s). Connecting a third-party DAS inside the Cluster LAN will block communication to the DAS outside of the Cluster LAN.

If DHCP is not enabled on the LAN, a static IP assignment for the GUI must be configured. When using DHCP consider using a reserved DHCP address.

To allow a third-party DAS (or any other device) to access inverters within a cluster(s) and treat all inverters as Endpoint Devices, *Port Forwarding* or *Static Routing* must be used.

5.8 Static IP Configuration, Gateway Inverter

Gateway inverters can be manually configured using a static IP. It is important to identify which Ethernet Port is configured with the static IP and ensure this is connected to the LAN. Once a static IP is configured, the port will no longer function as a Cluster connection.

Login to the desired gateway inverter and navigate to ***Inverter Configuration → Network Configuration → Advanced Network Configuration → Ethernet Configuration.*** Enter the desired **Static IP, Gateway IP, Netmask,** and **Interface.** See Figure 5-5

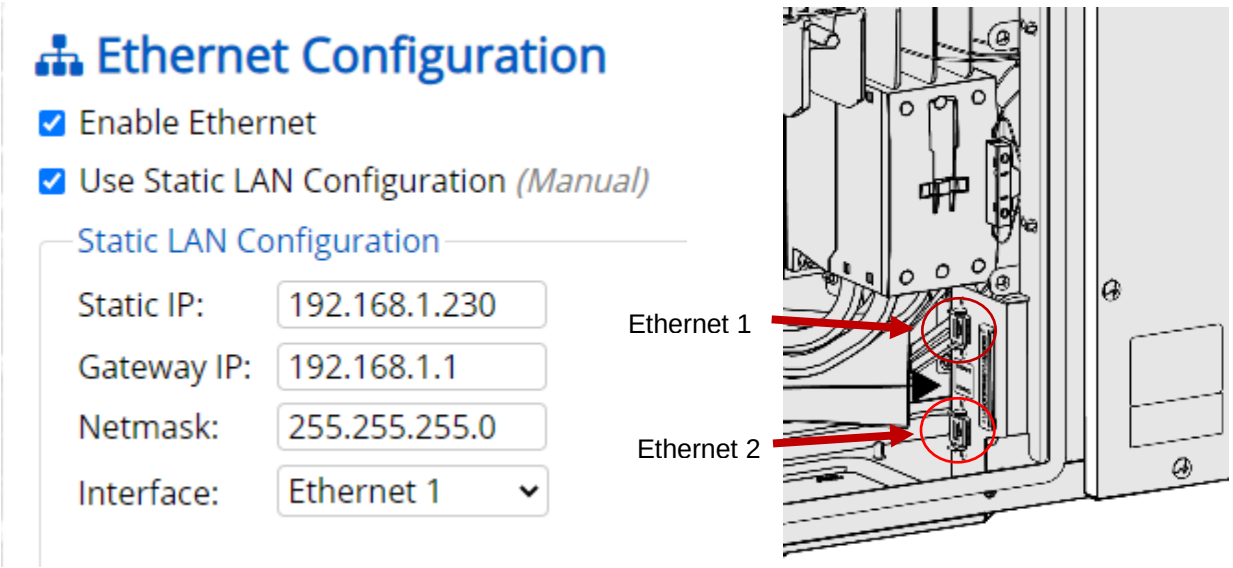

Figure 5-5 Static IP Configuration

5.9 Port Forwarding

Port forwarding is easily configured with most third-party monitoring providers. Make sure to consult with your monitoring provider before implementing. When Port Forwarding is implemented, a third-party DAS can address each inverter using the *Gateway Inverter External IP* and the specified port for the inverter with the cluster. The *Gateway Inverter External IP* is assigned to the Gateway Inverter via the DHCP or configured manually using a static IP.

5.9.1 Port Forwarding, Reserved DHCP IP Address

Before configuring Port Forwarding on the Gateway inverters(s), it is important to work with your network administrator to ensure that the gateway IP address(es) are fixed. If using DHCP consider using a reserved lease. If the IP address of the gateway inverter changes, communication to the cluster will fail.

The IP address assigned to the Gateway Inverters(s) must be in a different subnet than internal Cluster IPs within the Cluster LAN.

5.9.2 Port Forwarding, Configuring the Gateway Inverter

To configure Port Forwarding, first ***Enable External Modbus Access*** by selecting the check-box using the GUI of the desired Gateway Inverter.

By default the Gateway Inverter will detect and recommend an IP/Subnet from which external devices are allowed through the Inverter Gateway Firewall. For security purposes the user is encouraged to enter the most restrictive value, with preference given to the specific IP address of the external device (DAS). Up to two IP/Subnet pairs can be entered on each gateway.

NOTICE !
CYBER SECURITY! Configuring an entire IP subnet will not only allow the desired DAS device but would also enable all the other devices (authorized or unauthorized) in the subnet to be able to access the Inverter cluster LAN. Use the most restrictive settings possible.

Figure 5-6 Enabling external Modbus access, Port Forwarding

Enable/Configure Rules for Port forwarding by selecting the check box.

Enter all of the desired Ports in the right most column.

Ports must be between and 1702-1752.

Port Forwarding

Using port forwarding, modbus client may access modbus service of each inverter inside the cluster by connecting to inverter's active LAN IP.
Alternatively, client can connect to each inverter's internal Cluster IP by static routing.

☑ *Enable/Configure Rules *(Active Rules: 12)*

Enter the external port number under **External Access** to map to specific inverter's service.

Status	Name	Serial Number	Internal Access	External Access
✔	**Inverter_1**	**1S19Z5859010001**	10.36.193.64 :502	192.168.21.20: 1702 *
✔	Inverter_3	1S19Z5859010004	10.36.193.103 :502	192.168.21.20: 1703 *
✔	Inverter_6	1W1911750480006	10.71.238.119 :502	192.168.21.20: 1704 *
✔	Inverter_9	1W1911820450006	10.71.238.127 :502	192.168.21.20: 1705 *
✔	Inverter_2	1S17X2458720001	10.71.238.203 :502	192.168.21.20: 1706 *
✔	Inverter_10	1S19Z5859010007	10.71.238.227 :502	192.168.21.20: 1707 *
✔	Inverter_11	1S19Z5859010003	10.71.239.141 :502	192.168.21.20: 1708 *
✔	Inverter_8	1W1963120620004	10.71.242.172 :502	192.168.21.20: 1709 *
✔	Inverter_7	1W1953099470006	10.71.242.175 :502	192.168.21.20: 1710 *
✔	Inverter_12	1S19Z5859010008	10.71.243.30 :502	192.168.21.20: 1711 *
✔	Inverter_5	1W1963120610004	10.71.243.51 :502	192.168.21.20: 1712 *
✔	Inverter_4	1W1953099460002	10.71.244.48 :502	192.168.21.20: 1713 *

Figure 5-7 Port Forwarding

5.9.3 **Port Forwarding, DAS Configuration**

The External Access IP and respective Port settings must be configured on the third-party monitoring platform or DAS. This will allow the DAS to query the desired inverter properly.

5.10 **Static Routing**

To implement Static Routing the XGI Gateway Inverter(s) will need to be configured and a static routing rule will need to be added to the LAN.

Once implemented, inverters can easily be addressed as an Endpoint Device by a DAS or other external device using the Inverter Cluster IP address and port 502, for example: 10.78.125.31:502. Inverter Cluster IPs can be configured; see Section 5.11.

5.10.1 **Static Routing, Configuring the Gateway Inverter**

To configure Static Routing first ***Enable External Modbus Access*** by selecting the check box using the GUI of the desired Gateway Inverter.

By default the Gateway Inverter will detect and recommend an IP/Subnet from which external devices are allowed through the Inverter Gateway Firewall. For security purposes the user is encouraged to enter the most restrictive value, with preference given to the specific IP address of the external device (DAS). Up to two IP/Subnet pairs can be entered on each gateway.

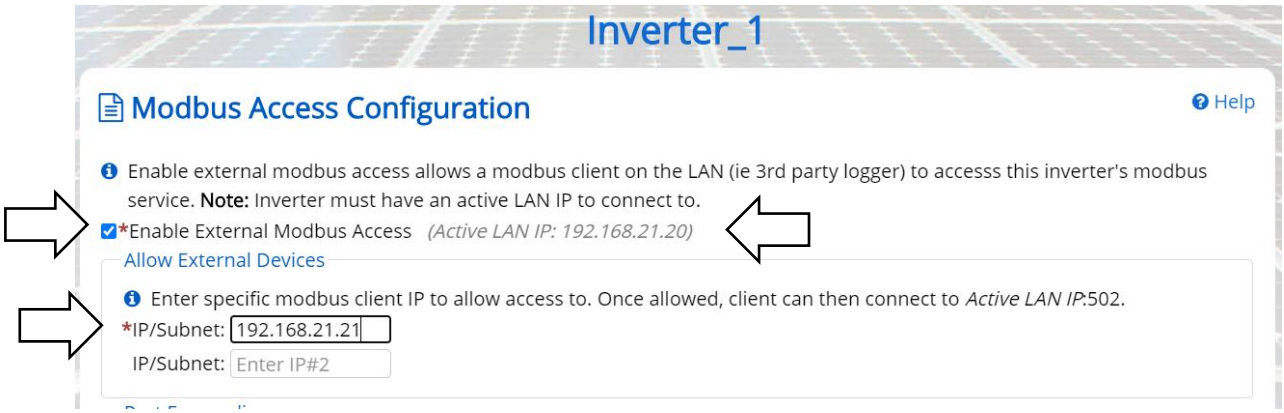

Figure 5-8 Enabling external Modbus access, static routing

5.10.2 **Static Routing, Entering Static Routing Rule on LAN**

A static routing rule can be implemented on any permanently installed device on the LAN. Most commonly this is configured on the Internet Gateway Modem/Router or the third-party DAS (if the feature is provided).

To enter the static routing rule, the following information is required:

- Destination Network:
  - The Gateway Inverter Cluster IP Address (Obtained from the landing page of the GUI)
- MASK: Cluster LAN mask
  - Determined by the IP address within the Cluster LAN. By default this is 255.0.0.0, but can be more restrictive if custom inverter Cluster IPs are configured.
- Gateway IP: Gateway Inverter External IP Address
  - Listed as ***Active LAN IP*** on the ***Modbus Access Configuration*** page, see Figure 5-8

The method of entering static routing rules varies depending on the device or operating system. For more information work with your IT professional.

5.11 **Manage Cluster IP Address**

The internal Cluster IP Address are automatically assigned to each XGI inverter at the factory. If desired, the IP address can be managed and statically assigned. Supported ranges include 10.0.021 – 10.255.255.254 & 192.168.0.21 – 192.168.0.254.

NOTICE !
Internal Cluster IPs: In most applications the internal cluster IPs are only used for communication behind the Gateway Inverters. Exceptions include: (1) utilizing Static Routing, and (2) when no gateway inverter is configured (this is not recommended.)

Login to the inverter using the Admin credentials and navigate to **Inverter Configurations → Network Configurations → Advance Network Configurations → Network Cluster Configurations.** Select the check box **Manage cluster IP addresses** and edit the **Cluster IPs** as desired, see Figure 5-9.

Click **Save** to store the changes.

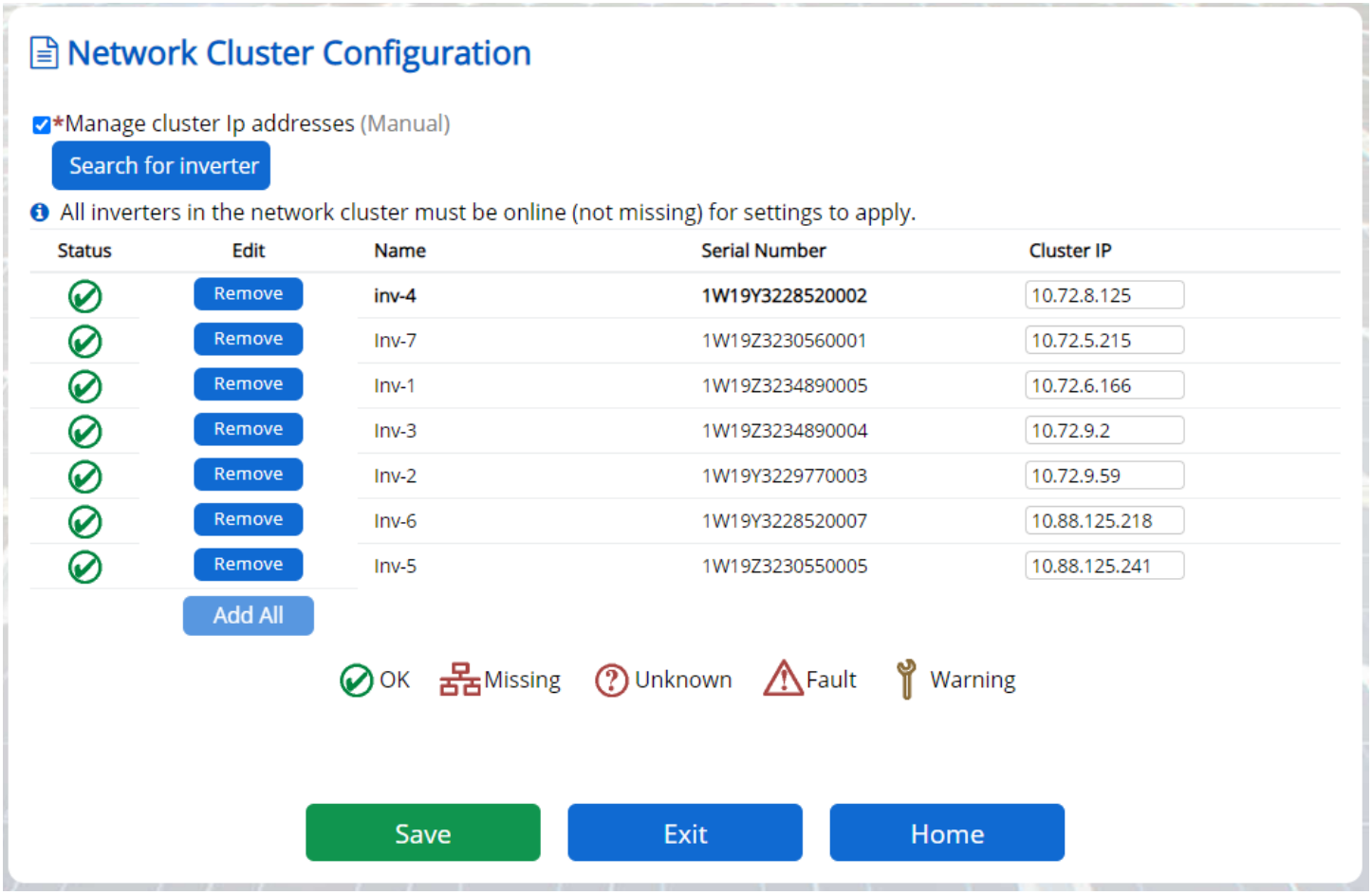

Figure 5-9 Manage IP Configuration

5.12 **Communication and I/O Ports**

The SOLECTRIA XGI has two interchangeable Ethernet Ports. These connections are located in the right-hand compartment within the Wire Box.

5.12.1 **Weather Station Connection (Optional)**

Only use weather stations that connect using Ethernet. As with all other non-inverter Ethernet devices, these should be connected outside of the Cluster LANs.

6 Graphical User Interface

The XGI series of inverters operate on an advanced communication platform that provides the operator with an unparalleled level of access and control. The user interface is designed to be intuitive and easy to use, however, it is important to understand the supported network topologies and some XGI specific terminology that is used within this document. The reader is encourage to review and understand Section 6.1 before proceeding.

6.1 XGI Terminology

This section discusses terminology that is used throughout this document.

6.1.1 XGI Cluster

The ***XGI Cluster*** or simply ***Cluster*** refers to a group of XGI inverters connected together via Ethernet that share one single common Cluster ***Gateway Inverter***. The Cluster forms its own LAN, protected from the rest of the onsite network by a built in firewall. Clusters can be configured using daisy chains, star networks, or mixed networks (See Section 5.3 for more details) providing flexibility during design and installation.

All inverters within a Cluster are accessible via the GUI which can be accessed by connecting to any inverter within a given Cluster.

INFO ✓
Inter-Inverter Communication Over Ethernet Only All XGI inverters are equipped with a WiFi antenna which is used to tether a smart device to the inverter or Cluster. Inverters do not communicate to each other over WiFi; all inter-inverter communication is over Ethernet only.

6.1.2 XGI Gateway Inverter

Every XGI Cluster has one, and only one, XGI ***Gateway Inverter.*** The Gateway Inverter functions as the master to the rest of the inverters within the Cluster, controlling communication with other devices outside of the Cluster including access to the local DAS, internet, remote access portal, firmware update server, etc.

The Cluster Gateway Inverter is automatically configured when it obtains an External LAN IP address. It obtains a DCHP-assigned IP address from the LAN router. If there is no DHCP server onsite, a Gateway Inverter will not be configured. Without a Gateway Inverter, much of the built-in functionality is disabled including remote firmware updates, automatic firmware updates, SolrenView Monitoring, remote diagnostics, and the Remote Access Portal.

6.2 Graphical User Interface (GUI) Overview

The Graphical User Interface (User Interface, or GUI) is accessed using a Laptop PC, PC, or Smart Device. The XGI inverters can be controlled over WiFi, Ethernet, or via an encrypted remote connection (Remote Access Portal available with subscription, optional.)

INFO ✓

No Built in Keypad: To provide a more robust GUI and remove a common failure point, the XGI does not contain a built-in keypad. The XGI has an LED Status Panel that provides a visual indication of the inverter status but **does not** allow the user to control the inverter.

The GUI provides the operator a “hands off” means to observe and modify the inverter settings and access all inverters within a Cluster from a single point of connection.

Typically when onsite, the preferred means of connection is using a smart phone, tablet, or PC connected over WiFi for ease of use. Specific operations require, or may be better suited for, an Ethernet connection. Table 6-1 lists common activities and the preferred/required connection type.

Table 6-1, Supported and preferred connection method

ACTIVITY	SUPPORTED CONNECTIONS	PREFERRED CONNECTION
UPDATING FIRMWARE	Ethernet	Ethernet is required
COMMUNICATION COMMISSIONING	Ethernet or WiFi	Ethernet
TROUBLESHOOTING COMS	Ethernet or WiFi	Ethernet
TROUBLESHOOTING INVERTERS	Ethernet or WiFi	WiFi
GENERAL INVERTER INTERACTION	Ethernet or WiFi	WiFi

6.2.1 Connecting to the Inverter, Ethernet

To access the inverter using Ethernet, connect an Ethernet cable from the laptop to the inverter. The Ethernet port is located inside the wiring box (see Figure 3-7). Wait 15 seconds for the laptop to obtain an IP address from the XGI Inverter. DHCP must be enabled on the PC connected to the inverter. Once the laptop recognizes the Ethernet connection, open your preferred web browser (example Firefox or Chrome) and enter “xgi.solar” in the address bar, then click Enter to navigate to the website. The laptop should establish a connection with the inverter and display the GUI.

INFO ✓

Having trouble connecting to the XGI over Ethernet?

- Verify that the laptop has connected to the XGI network, look at the LEDs on your Ethernet port to ensure they are illuminated. If no lights are on or flashing, check your Ethernet cable and connection.
- Ensure DHCP is enabled on your PC.
- Try closing your web browser and re-opening a new session.
- Check to make sure the XGI network LED is illuminated. The inverter takes approximately 5 minutes to fully boot up. If connecting after a recent power cycle, wait 5 minutes and try again.
- IP Conflict. It is possible that the network has an IP conflict between the internal Cluster LAN and the site LAN. If the cluster IPs are in the same or overlapping subnet, a conflict may prevent the inverter from connecting.

6.2.2 Connecting to the Inverter, WiFi

To access the inverter using WiFi, connect the smart device or laptop to the WiFi network (see Table 6-2 for default SSID). Wait 15 seconds for the laptop to obtain an IP address from the XGI Inverter. Open your preferred web browser (example Firefox or Chrome) and enter ***xgi.solar*** in the address bar, then click Enter to navigate to the website. The laptop should establish a connection with the inverter and display the GUI.

Table 6-2 Default Network Credentials

WIFI SSID (DEFAULT)	PASSWORD (CASE SENSITIVE)
XGI-00-006	**Solectria**

INFO ✓

Having trouble connecting to the XGI over WiFi?

- Verify that the laptop has connected to the XGI network, look at the network and internet connections on your PC or smart device to ensure you are connected to the correct WiFi network
- Try getting closer to the inverters WiFi antenna. The XGI provides a strong WiFi signal with 75ft and direct line-of-site
- Ensure the WiFi antenna is connected to the inverter
- Try closing your web browser and re-opening a new session
- Check to make sure the XGI network LED is illuminated. The inverter takes approximately 5 minutes to fully boot up. If connecting after a recent power cycle, wait 5 minutes and try again.

6.2.3 Inverter List

The Inverter List is the default display shown when first logging into an XGI network cluster. The Inverter List shows a register of all the inverters connected together via Ethernet with one common Gateway Inverter. These inverters are said to comprise a ***Cluster***. To access the Inverter List, connect to any inverter within the Cluster using Ethernet or WiFi, open a browser and navigate to ***xgi.solar***.

The Inverter List displays the names, serial numbers, Cluster IP addresses, and status of the all inverters registered to the Cluster, or currently connected to the Cluster, see Figure 6-1. To navigate to a particular inverter, select the name of the inverter by clicking it.

The gateway symbol denotes which inverter is configured as the gateway.

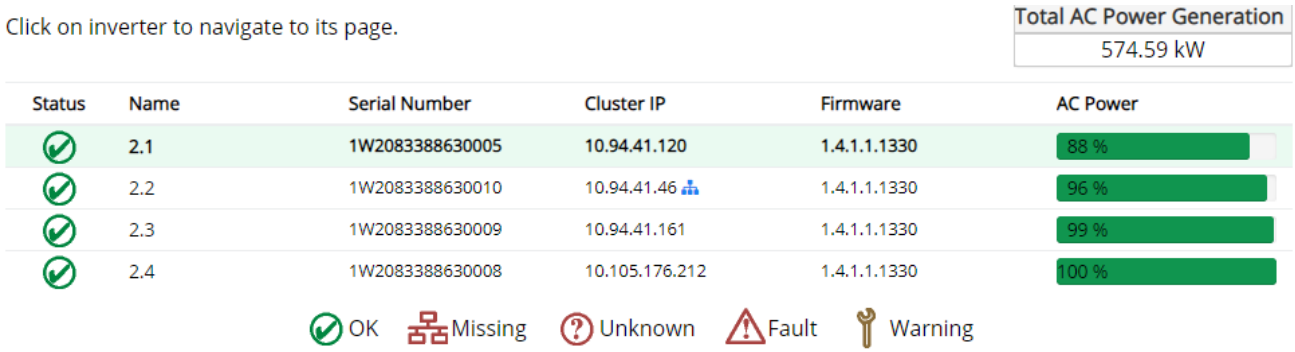

Figure 6-1 Inverter List Example

Table 6-3 Explanation of Symbols in User Interface

Symbol	***Explanation***
	Inverter OK: This indicates that the inverter is on the Reference List and functioning normally.
	Inverter Missing: This indicates that the inverter is on the Reference List but is undetected.
	Inverter Unknown: This indicates that the inverter detected is not on the Reference List. This icon is overridden if a Fault or warning is present.
	Inverter Fault: This indicates that the inverter has an inverter issue and cannot produce power.
	Inverter Warning: This indicates that the inverter has an issue but can produce power.

In the sample inverter list in **Error! Reference source not found.**Figure 6-1, several nodes are worth noting.

- **Inverter 2.1:** This inverter, indicated in **bold**, is the inverter that the smart device or laptop last accessed and it is operating normally.
- **Inverter 2.2:** This inverter is the Gateway Inverter, denoted with the gateway symbol .

6.2.4 Inverter Home Page

Each inverter has a home page (see Figure 6-2) that shows an overview of the inverter. It displays the inverter name, serial number, time, current AC power being produced, energy produced for the day and total lifetime energy produced. Lower on the page is the inverter status, which mirrors the LED Status Panel on the inverter.

Figure 6-2 Inverter Home Page (Observer Mode)

Selecting the inverter status icons will give their current state, as shown in Figure 6-3.

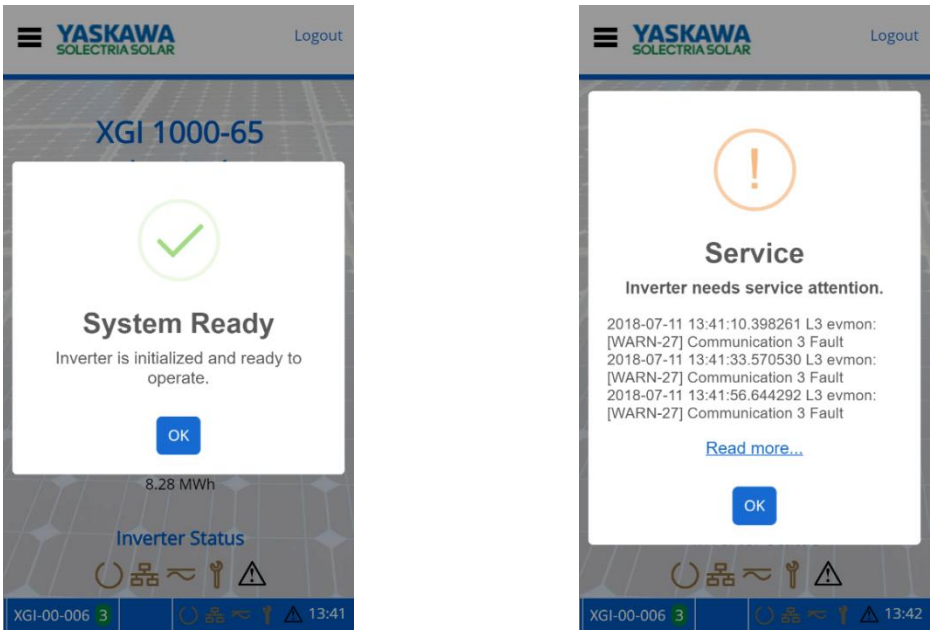

Figure 6-3 Current Status with Network and Communication Working and Maintenance with an Event

The menu button is located in the upper left corner, represented by three horizontal lines (≡). When clicked, a drop-down menu appears. In the upper right is a Login/Logout button.

6.2.5 Logging In

Before logging in, the user interface is in *observer* mode. Logging in is necessary to view and access the Inverter Configurations options in the menu in *administrator* mode. Everything that is accessible in *observer* mode is also accessible in *administrator* mode. If the Logout button is pressed in *administrator* mode, the user returns to *observer* mode. Table 6-4 shows the credentials needed to login as an *administrator*.

Table 6-4 Default Login Credentials

DEFAULT USER NAME (CASE SENSITIVE)	DEFAULT PASSWORD (CASE SENSITIVE)
admin	SolectriaSolar

The inverter will log the user out automatically after it is idle for 30 minutes.

6.2.6 Changing Settings

Changing settings or configurations in the GUI is easy and intuitive. Most pages allow the user to enter text, numbers, select check-boxes, or actuate sliders. Once a setting or configuration has been adjusted use the **Save** button to save any changes.

Many fields have ranges that guide the user to input acceptable data.

The **Exit** button can be used to “escape” or back up to the previous page.

The **Home** button can be used to “escape” or back up to the Home page.

6.2.7 Help

Many of the pages within the GUI feature a ***Help*** section containing important information regarding the particular settings or functions. Make sure to review the Help sections where applicable.

6.3 Menu Structure

This menu structure is subject to change as firmware updates are released.

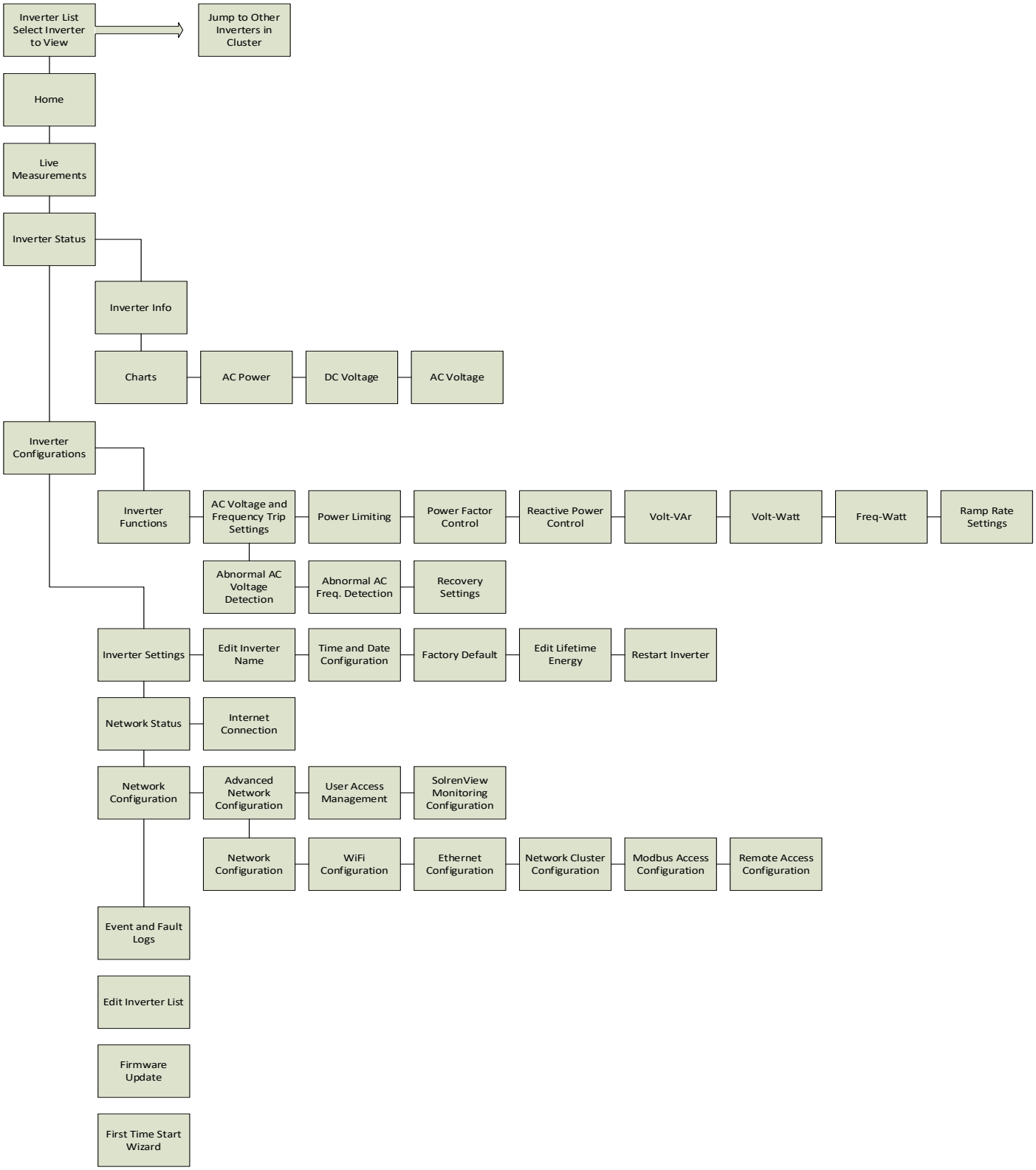

7 Firmware Updates

SOLECTRIA XGI inverters support local and remote firmware updates. Remote updates are performed automatically from the Yaskawa Solectria Solar server or manually via the Remote Access Portal (with subscription).

Local firmware updates can be performed with a laptop and an Ethernet cable.

7.1 Automatic Remote Firmware Updates

By default, Automatic Remote Firmware updates are enabled. When selected, the inverter will check for firmware updates and download automatically if an update is available. The firmware will be downloaded to the gateway inverter and then distributed across the rest of the network. On the following morning (or after a power cycle), all inverters will perform a self-update. During the self-update the inverters may not produce power. Updates generally occur in the early AM once PV power has stabilized but prior to peak production, reducing lost revenue.

Having the Enable Automatic Remote Firmware update unchecked is not recommended as product improvements may have occurred since the purchase of the product. If the user disables this feature, the site operator will be responsible for performing any firmware updates.

7.2 Manual Firmware Updates, Locally

Manual firmware updates performed locally should be performed with a PC and an Ethernet connection. Firmware updates over WiFi are not supported.

7.3 Manual Firmware Updates, Remote Server

Users that choose not to enable remote firmware updates, but still have onsite internet access can initiate a one-time firmware updates from our remote servers. Remote server paths can be found on our website www.solectria.com or by contacting technical support at 978-386-9700x2

7.4 Manual Firmware Updates, Remote Access Portal

Manual firmware updates are supported on the Remote Access Portal. For more information regarding the Remote Access Portal and manual remote firmware updates, see *Remote Access Portal Installation and Operations Manual.*

Figure 7-1 Firmware Update

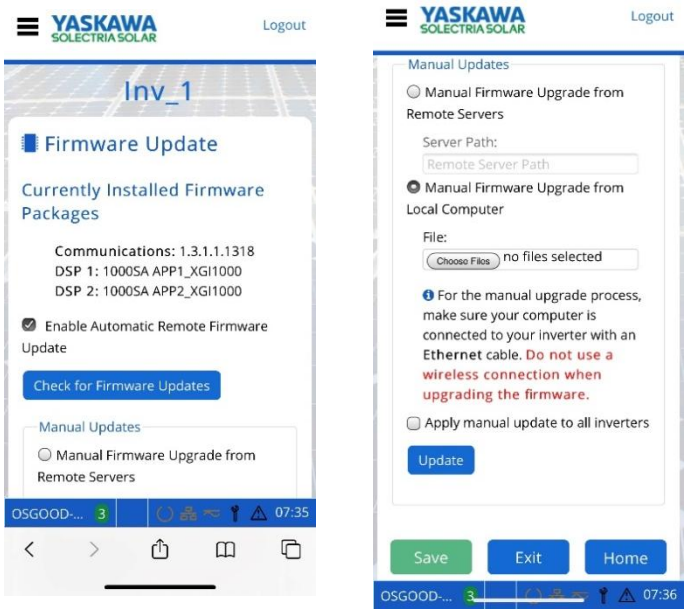

8 Communication Commissioning

Once all inverters are installed and energized, the XGI communications can be commissioned. Before proceeding, ensure that the following conditions are met:

- ✓ All inverters energized (DC voltage is present)
- ✓ All inverters are connected via Ethernet in a supported network topology
- ✓ All gateway inverters are connected to the LAN with DCHP enabled
- ✓ Internet access is available on the LAN (if applicable)

INFO ✓
Don't Break the Chain! When connecting to a Cluster over Ethernet during the commissioning process it is important that the Cluster LAN remain intact. Always connect to an open port on one of the XGI inverters at the end of a daisy chain so as to not disconnect any inverters from the Cluster.

INFO ✓
Discovery: When inverters are connected in a Cluster it may take up to 10 minutes for all inverters to discover each other.

8.1 Communication Commissioning Checklist

- ❑ **Connect to the Cluster**
  Connect to the desired Cluster over Ethernet or WiFi using a smart device. If connecting over Ethernet be sure not to disrupt the daisy chain or star network, always connect to an inverter at the end of a chain.

- ❑ **Verify Communication**
  On the Landing Page, verify that all expected inverters appear on the Inverter List. If inverters are missing, check wiring and ensure that all inverters have been powered on for a minimum of 10 minutes.

- ❑ **Startup Wizard**
  Run the **Startup Wizard** by logging into one of the inverters and selecting ***Startup Wizard*** from the main menu.

- ❑ **Name the Inverters**
  Enter a name for each inverter on the list.

- ❑ **Configure the Reference List**
  Add or **Remove** the inverters from the reference list. This list consists of all inverters that are currently communicating in the Cluster AND inverters that were previously added to the Reference List.

- ❑ **Select the Time Zone**
  Select the desired Time Zone from the dropdown list.

- ❑ **Choose a Cluster Name, SSID**
  A Cluster Name or SSID consists of three parts; the Site Name, Cluster ID, and WiFi channel. The Cluster Name generated in this step will determine the WiFi SSID or WiFi network name.

9 Maintenance and Troubleshooting

If an inverter is not running correctly, the Status Panel will show that there is an issue. When the inverter is working normally, the three leftmost LEDs are lit (Ready, Network and Communications, and Power) and the two on the right will be off (Maintenance and Power Fault). If the Maintenance LED or the Maintenance and Power Fault LEDs are illuminated, the inverter requires attention. (Refer to Section 1.4)

The User Interface will also show when an inverter is not running correctly. When the inverter is working correctly, the inverter list will show a green checkmark next to the inverter.

9.1 Event Codes

There are three levels of event codes: critical event, warning event, and information event.

9.1.1 Critical Events

Critical events will always cause the inverter to cease producing AC power and the inverter cannot self-recover. This is indicated by the display illuminating both the red Power Fault LED (triangle) and the Yellow Maintenance LED (wrench). Note that some of these events can create a hazardous situation, indicated by **DO NOT TOUCH** in Table 9-1 Critical Event Codes.

DANGER	**Ground Fault Hazard** Inverter enclosure is an electrical hazard. **DO NOT TOUCH** any equipment (including, but not limited to: the inverter, the PV array disconnect switch, the PV array combiner, the PV panels, or the PV racking system). Immediately contact the installer or another qualified person to locate and repair the source of the ground fault.

Table 9-1 Critical Event Codes

Critical Event Code	Display Message	Description	Troubleshooting
1	Software Parameter Load Failure	An attempt to remotely download software parameters has failed.	Attempt to update the firmware and power cycle the inverter. Contact Technical Support.
2	Internal Communication 1 Failure	Internal communication failure detected.	Attempt to update the firmware and power cycle the inverter. Contact Technical Support.
3	Internal Communication 2 Failure	Internal communication failure detected.	Attempt to update the firmware and power cycle the inverter. Contact Technical Support.
4	ARC Fault Detected	A DC series arc fault has been detected in the PV array.	Inspect for and repair damage to the PV array and DC wiring. Clear the ARC Fault and retest. Contact Technical Support.
5	AC Contactor Failure	One or both of the AC grid contactors has failed. Contactors may fail open or closed.	Power cycle the inverter. If the inverter doesn't clear the error, contact Technical Support.

6	Critical Over Temperature	Internal hardware temperature has exceeded the allowable limits.	Check to ensure external fans are clear of debris and are operating. -If external fans are not operating. Contact Technical Support, fans may need to be replaced.
7	Ground Fault, Excessive Leakage Current	A ground fault condition has been detected. Leakage current is greater than the allowable limit. Check the array for an unintentional reference to ground.	**DO NOT TOUCH** any equipment (including, but not limited to: the inverter, the PV array disconnect switch, the PV array combiners, the PV panels, or the PV racking system). Immediately contact the installer or another qualified person to locate and repair the source of the ground fault.
8	Ground Fault, Isolation Resistance Low	A ground fault condition has been detected. Insolation resistance between the DC conductors and ground is below the allowable limit. Check the array for an unintentional reference to ground.	**DO NOT TOUCH** any equipment (including, but not limited to: the inverter, the PV array disconnect switch, the PV array combiners, the PV panels, the PV racking system). Immediately contact the installer or another qualified person to locate and repair the source of the ground fault.
9	Critical Internal Hardware Failure	A critical hardware failure has been detected to the inverter powertrain.	Power cycle the inverter. If the inverter doesn’t clear the error, contact Technical Support.
10	Ground Fault Detection Self Check Failure	Ground fault detection circuitry is damaged or has malfunctioned.	Power cycle the inverter. If the inverter doesn’t clear the error, contact Technical Support.
11	Operational Self Check Failure	Inverter self-diagnostic check has failed during operation. Inverter requires service.	Power cycle the inverter. If the inverter doesn’t clear the error, contact Technical Support.
12	Startup Self Check Failure	Inverter self-diagnostic check has failed at startup. Inverter requires service.	Power cycle the inverter. If the inverter doesn’t clear the error, contact Technical Support.
…			
32		Reserved	

9.1.2 **Warning Events**

Warning events will always result in the inverter ceasing AC power production, but the inverter can self-recover if conditions causing the event cease. A warning event is indicated by the inverter illuminating the Maintenance LED (wrench).

Table 9-2 Warning Event Codes

Warning Event Code	Display Message	Description	Troubleshooting
1	Internal Over Current/ Over Voltage	Software has detected an over-voltage or over-current event. Power production will temporarily be affected.	Power cycle the inverter. If the inverter doesn't clear the error, contact Technical Support.
2	Phase Lock Loop Failure	Inverter has failed to synchronize with the grid. Power production will temporarily be affected.	Power cycle the inverter. If the inverter doesn't clear the error, contact Technical Support.
3	Islanding Detected	An islanding condition has been detected. The inverter will cease production until the event has ended.	Using a CAT III multi-meter verify the AC voltage. If an islanding condition (no AC voltage) is identified check all AC fuses or breakers. Inspect the AC conductors for damage. If AC voltage is present and the inverter will not grid connect contact Technical Support.
4	Open Phase Detected	Open AC phase condition has been detected.	Using a CAT III multi-meter verify the AC voltage. If a phase loss is identified check all AC fuses or breakers. Inspect the AC conductors for damage. If no phase loss is identified contact Technical Support.
5	AC Low Frequency 1 Detected	AC low frequency region 1 detected.	Using a CAT III multi-meter verify the AC frequency. If there is a discrepancy of greater than 2% between the measured results and the frequency reported by the inverter contact Technical Support, otherwise wait for the grid conditions to improve.
6	AC Very Low Frequency 2 Detected	AC low frequency region 2 detected.	Using a CAT III multi-meter verify the AC frequency. If there is a discrepancy of greater than 2% between the measured results and the frequency reported by the inverter contact Technical Support, otherwise wait for the grid conditions to improve.
7	AC High Frequency 1 Detected	AC high frequency region 1 detected.	Using a CAT III multi-meter verify the AC frequency. If there is a discrepancy of greater than 2% between the measured results and the frequency reported by the inverter contact Technical Support, otherwise wait for the grid conditions to improve.

8	AC Very High Frequency 2 Detected	AC high frequency region 2 detected.	Using a CAT III multi-meter verify the AC frequency. If there is a discrepancy of greater than 2% between the measured results and the frequency reported by the inverter contact Technical Support, otherwise wait for the grid conditions to improve.
9	AC Low Voltage 1 Detected	AC low voltage region 1 detected.	Using a CAT III multi-meter verify the AC voltage. If there is a discrepancy of greater than 2% between the measured results and the voltage reported by the inverter contact Technical Support, otherwise wait for the grid conditions to improve.
10	AC Very Low Voltage 2 Detected	AC low voltage region 2 detected.	Using a CAT III multi-meter verify the AC voltage. If there is a discrepancy of greater than 2% between the measured results and the voltage reported by the inverter contact Technical Support, otherwise wait for the grid conditions to improve.
11	AC Extremely Low Voltage 3 Detected	AC low voltage region 3 detected.	Using a CAT III multi-meter verify the AC voltage. If there is a discrepancy of greater than 2% between the measured results and the voltage reported by the inverter contact Technical Support, otherwise wait for the grid conditions to improve.
12	AC High Voltage 1 Detected	AC high voltage region 1 detected.	Using a CAT III multi-meter verify the AC voltage. If there is a discrepancy of greater than 2% between the measured results and the voltage reported by the inverter contact Technical Support, otherwise wait for the grid conditions to improve.
13	AC Very High Voltage 2 Detected	AC high voltage region 2 detected.	Using a CAT III multi-meter verify the AC voltage. If there is a discrepancy of greater than 2% between the measured results and the voltage reported by the inverter contact Technical Support, otherwise wait for the grid conditions to improve.
…			
25	Communication 1 Fault	Communication processor initialization fault.	Power cycle the inverter. If the inverter doesn’t clear the error, contact Technical Support.
26	Communication 2 Fault	Communication processor application fault.	Power cycle the inverter. If the inverter doesn’t clear the error, contact Technical Support.

27	Communication 3 Fault	Communication processor hardware fault.	Power cycle the inverter. If the inverter doesn't clear the error, contact Technical Support.
28	Network Fault	A network connection has failed.	Check to make sure the Ethernet connections are firmly seated. Check the Wi-Fi antennas, ensure they are vertically mounted.
29	Software Update Fault	Communication processor software update fault.	Power cycle the inverter. If the inverter doesn't clear the error, contact Technical Support.
30	Unauthorized Network Access	An unauthorized attempt to access the network has occurred.	Check to ensure there have not been any malicious attempts to access the inverter network.
31	Invalid Configuration Request	An external request to adjust setting beyond the allowable limits.	Check to make sure the value being entered is acceptable and re-enter.
32		Reserved	

9.1.3 **Information Events**

Information events will not cause the inverter to cease producing AC power and are used for reference. There is no LED for them.

Table 9-3 Information Event Codes

Info Event Code	Display Message	Description	Troubleshooting
1	Power Derating, Temperature	Inverter output power is reduced due to the internal operating temperature of the inverter.	Check to make sure all external fans are operating, replace fans if necessary. Make sure the ambient temperature is within the normal operating range.
2	Power Derating, Customer Command	Inverter output power is reduced in response to user command.	Verify that that a request has been made to de-rate the inverter. If this request has not been made, contact Technical Support.
…			
32		Reserved	

INFO→	**Note: Annual preventative maintenance is required to maintain the inverter warranty.** Properly document all preventative maintenance, including date, inverter serial numbers, work performed and all supporting documentation and photographs. Customers must be able to provide this documentation to demonstrate that annual preventative maintenance was conducted. *Lack of documentation that attests to annual preventative maintenance may render the inverter warranty invalid*.

9.2 Regular Preventative Maintenance

Solectria's warranty terms require regular preventative maintenance. Regular preventative maintenance must include Thermography, Visual Inspections, Fans, Plenum Cleaning (see details in the sections below) and perform regular firmware updates. Solectria recommends that preventative maintenance be performed annually. It may be prudent to perform preventative maintenance more frequently, depending upon specific site conditions.

- ✓ The inverter wiring compartment requires visual inspection and thermography, and
- ✓ The cooling system and fans need to be clean of debris to operate properly.
- ✓ Perform regular firmware updates

Performing these preventative maintenance activities will help ensure proper inverter operation, avoid preventable failures, and extend the useful life of the inverter. Inverter damage or failure attributed to a lack of regular preventative maintenance may not be covered by the product warranty.

9.2.1 Thermography and Visual Inspections

Thermography and visual inspection of the inverter's wiring box can identify issues before a failure occurs. Use a thermal camera to inspect components in the wiring portion of the inverter after the inverter has been running for at least one hour. (Refer to Figure 9.1). *Properly record and document this preventative maintenance.*

1. Allow the inverter to run above 50% full power for at least one hour, before performing thermography.
2. Turn off the inverter, first by setting the Local AC Shutoff Switch on the inverter to "OFF", then by turning the DC Switch on the inverter to "OFF".
3. Unfasten all 6 latches securing the inverter cover, raise the lid and use the supports to lock it in place.
4. Use a thermal camera to inspect for excessive temperatures of the AC terminations, DC terminations, busbar between the AC contactors, and AC filter terminals. *Record the ambient temperature and each component's temperature*. Each component's temperature must be less than the sum of the ambient temperature plus the maximum temperature rise above ambient value in the table below. Each component's temperature must also be less than its maximum temperature value. If any of the components in Table 9-4 exceeds its maximum allowed temperature, or values vary by more than 10°C among the three AC phases, please contact Solectria Technical Support for further assistance.

Component	Maximum Temp. Rise above Ambient	Temperature Maximum
AC or DC Termination	50°C	90°C

AC Contactor Busbar	55°C	95°C
EMI Filter Terminals	40°C	90°C

Table 9-4 Component Temperature Limits

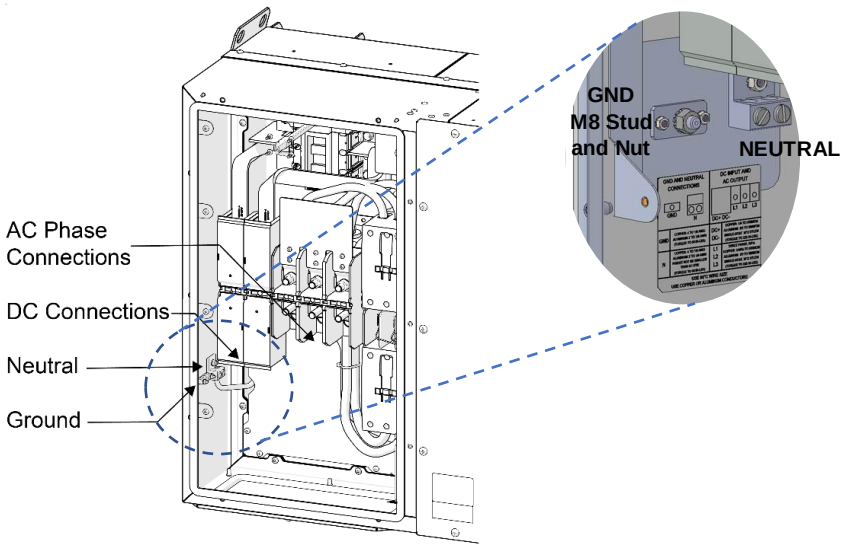

Figure 9-1 Inverter Wiring Box

5. While the cover is off, perform a visual inspection of the wiring box compartment, looking for water, excessive debris, discoloration of components, quality of workmanship, pests, or anything else that may interfere with proper inverter operation.
6. Visually inspect the DC MOVs and AC MOVs for damage or discoloration.
7. Replace the cover with all of the screws before re-energizing the inverter.

9.2.2 Cleaning the Fans and Cooling Plenum

The XGI 1500V inverter has three fans on the right-hand side of the enclosure. These fans are protected with finger guards. Over time, these guards may collect debris that restricts airflow and reduces the effectiveness of the cooling system. Keeping the fans and cooling plenum clean will prevent the inverter from overheating.

Properly record and document this preventative maintenance.

To clean the fans:

1. Turn off the inverter, first by turning the Local AC Shutoff Switch on the inverter to “OFF”, then by turning the DC Switch on the inverter to “OFF”.
2. Use a vacuum with a non-metallic nozzle to remove the debris from the fan guards. Use a stiff nylon brush to loosen any stubborn debris.

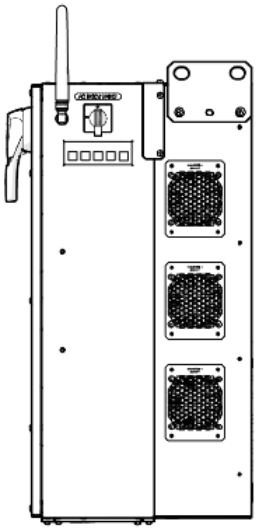

Figure 9-2 Inverter Fan Gaurds

Debris may also collect in the cooling plenum, on the heatsinks, and inductors located in this section of the inverter. A removable panel located at the rear of the inverter provides access for cleaning.

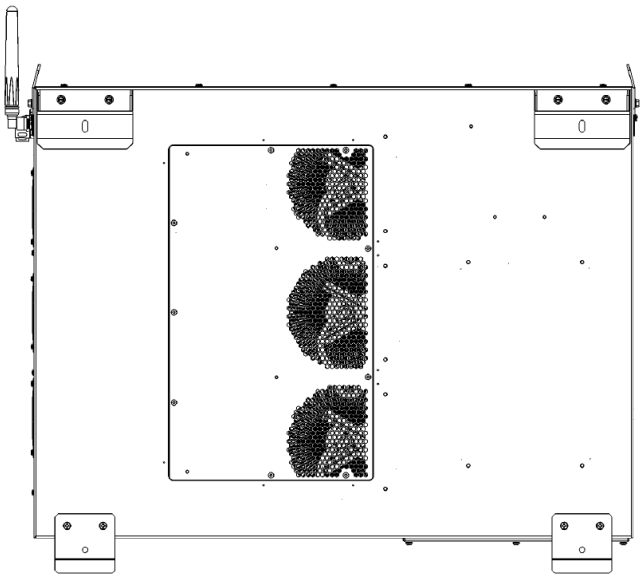

Figure 9-3 Rear Access Panel

WARNING	Do not use any metallic tools within the cooling plenum as this could damage the insulation on the inductors.

Properly record and document this preventative maintenance.

To clean the cooling plenum:

1. Turn off the inverter, first by moving the DC Switch on the inverter to “OFF”, then by turning the Local AC Shutoff Switch on the inverter to “OFF”.
2. Remove the 11 screws from the rear access panel and set aside.

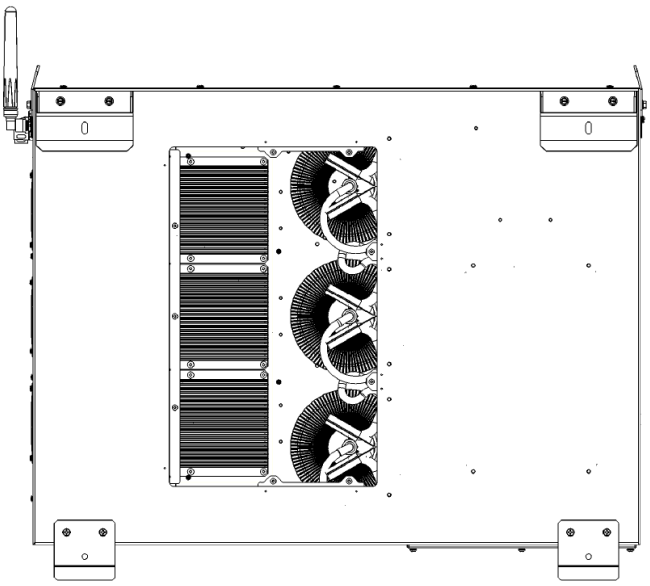

Figure 9-4 Rear Access Panel Removed

3. Use a vacuum with a non-metallic nozzle to remove the debris from air plenum, heatsink, and inductors. Use a stiff nylon brush to loosen any stubborn debris.
4. Replace the cover before re-energizing the inverter.

INFO→	Failure to keep the inverter properly maintained may cause permanent damage not covered under warranty.

10 Specifications

10.1 General Specifications

Table 10-1 General Specifications

	XGI 1500-125/125-xx	XGI 1500-125/150-xx	XGI 1500-150/166-xx	XGI 1500-166/166-xx
Max Input Voltage	1500 VDC			
Full Power Input Voltage Range	860 to 1250 VDC	860 to 1250 VDC	860 to 1250 VDC	860 to 1250 VDC
Operating Voltage Range	860 to 1450 VDC	860 to 1450 VDC	860 to 1450 VDC	860 to 1450 VDC
Max Operating Input Current	148.3 A	148.3 A	178.0 A	197.7 A
MPP Trackers	1			
Max Short Circuit Current (Isc x 1.25)	500 A			
Max Input Back-feed	0 A			
Open Circuit Strike Voltage	920 VDC			
Synchronization Inrush Current	12 A_{RMS}			
Output Power Factor	Unity > 0.99; Adjustable from -0.80 to +0.80			
Grid Type	3 Phase Wye with Ground and Neutral			
Nominal Output Voltage	600 VAC			
Nominal Frequency	60 Hz			
Output Voltage Range	-12 to +10%			
Frequency Range	57 - 62 Hz			
Min AC Overcurrent Protection Rating	150 A	200 A		
Max Output Fault Current	189 A_{RMS} 10.9ms			
Max Output Current	120 A_{RMS}	144 A_{RMS}	160 A_{RMS}	160 A_{RMS}
Max Output Power	125 kW 125 kVA	125 kW 150 kVA	150 kW 166 kVA	166 kW 166 kVA

10.2 Enclosure

Table 10-2 Enclosure Information

Enclosure Finish, Rating	Polyester Powder-Coated Aluminum, NEMA 4X, IEC IP66, Rainproof
Dimensions	29.5 in x 39.4 in x 15.0 in (750 x 1000 x 380 mm)
Weight	270 lbs (122 kg)
Mounting Angle Range	Vertical Only

10.3 Voltage and Frequency Limits and Trip Times

All models of the SOLECTRIA XGI 1500 series inverters comply with IEEE1547-2003 requirements. The tables below show the standard settings.

Table 10-3 Default Voltage Limits and Trip Times

Voltage Range (± 1%)	Clearing Time (± 0.2 s)	Clearing Time Adjustable Up to and Including (± 0.1 s)
V < 45%	0.16 s	0.16 s
45% <= V < 60%	1.0 s	11 s
60% <= V < 88%	2.0 s	21 s
88% <= V < 110%	No trip	No trip
110% <= V <= 120%	1.0 s	13 s
f > 120%	0.16 s	0.16 s

Table 10-4 Frequency Limits and Trip Times

Frequency Range (± 0.05 Hz)	Clearing Time (± 0.2 s)	Clearing Time Adjustable Up to and Including (± 0.1 s)
F < 57 Hz	0.16 s	10 s
57 Hz <= F < 59.5 Hz	2.0 s	300 s
59.5 Hz <= F < 60.5 Hz	No trip	No trip
60.5 Hz <= F <= 62 Hz	2.0 s	300 s
V > 62 Hz	0.16 s	10 s

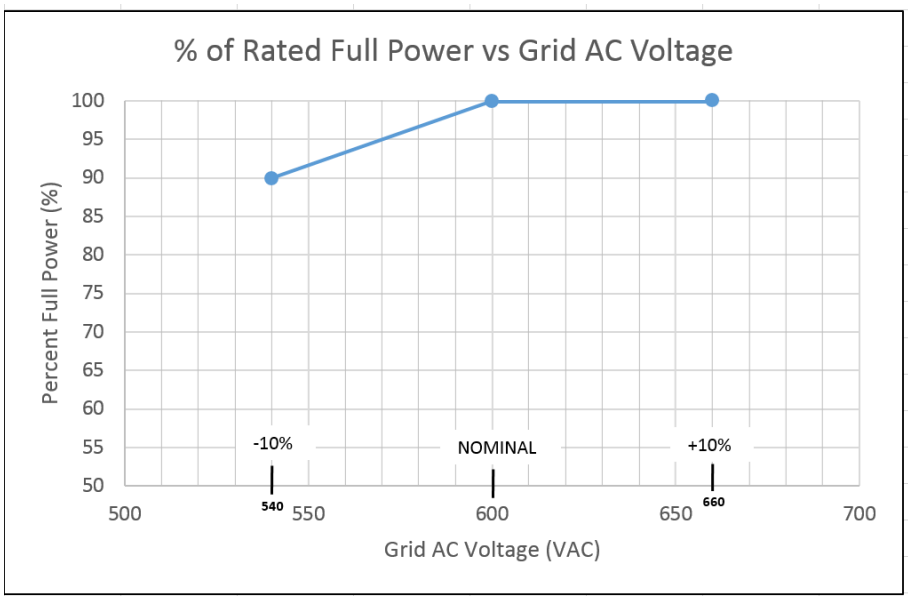

Figure 10-1 Derating with AC Voltage

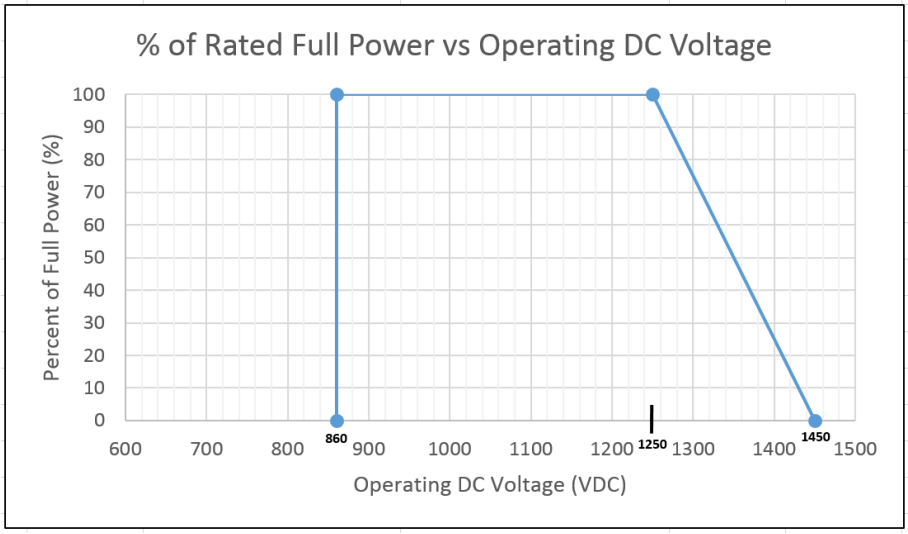

Figure 10-2 Derating with DC Voltage

10.4 **Temperature and Altitude**

Table 10-5 Normal Temperature Ranges

Ambient Temperature Range	-40°F to +140°F (-40°C to +60°C)
Derating Temperature	113°F (45°C)
Storage Temperature Range	-40°F to +167°F (-40°C to +75°C)
Storage Humidity Range	Relative humidity (non-condensing) 0 – 95%

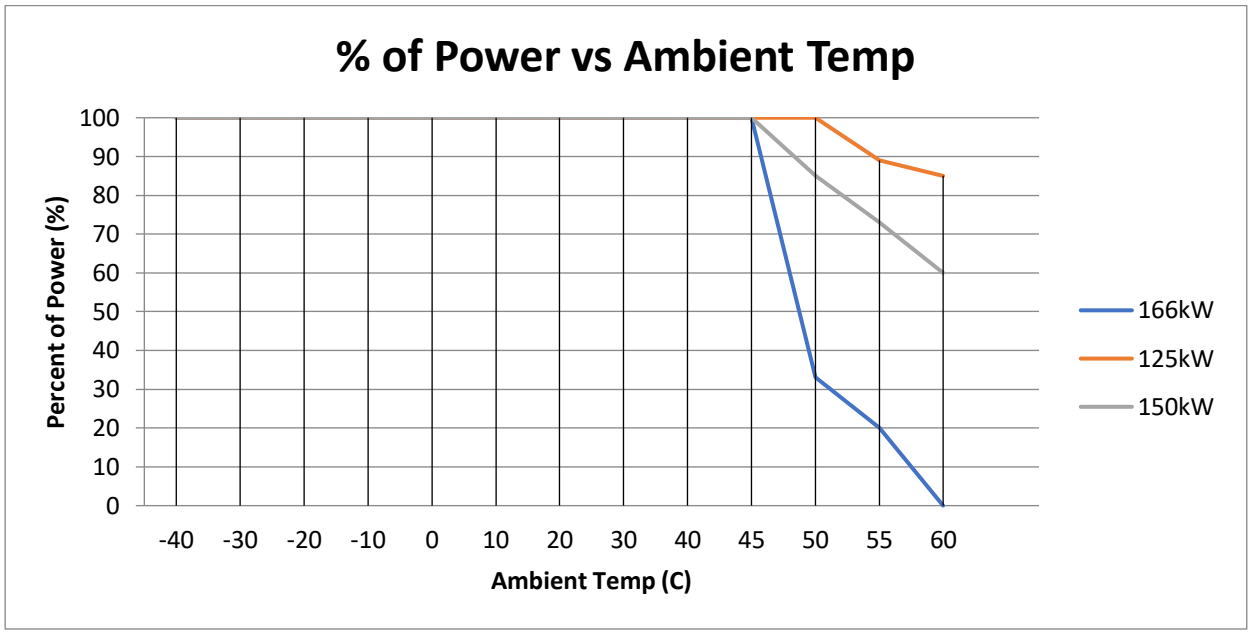

Figure 10-3 Derating with Temperature

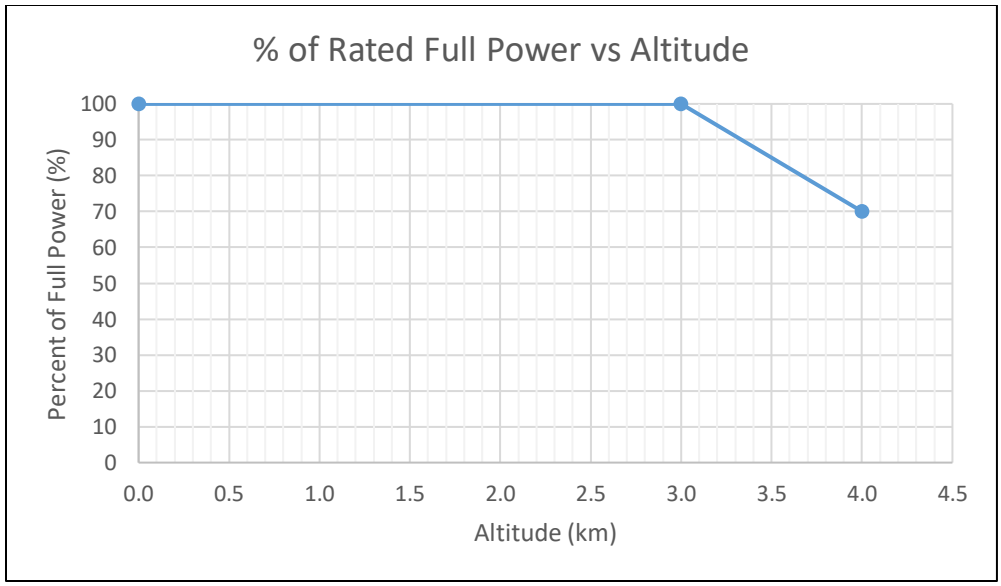

Figure 10-4 Derating with Altitude (see INFO note below)

INFO→	**Power De-rating at Altitude** The XGI 1500 inverter's maximum power capability is dependent on altitude and ambient temperature. Generally, the inverter can deliver its rated full power at elevations up to 3 km (9,843 ft), and a reduced maximum power at elevations up to 4 km (13,123 ft). The maximum allowable power output may be further reduced at elevated ambient temperatures.

10.5 **P-Q Curves**

XGI 1500V 166kW/166kVA – Reactive Capability Data

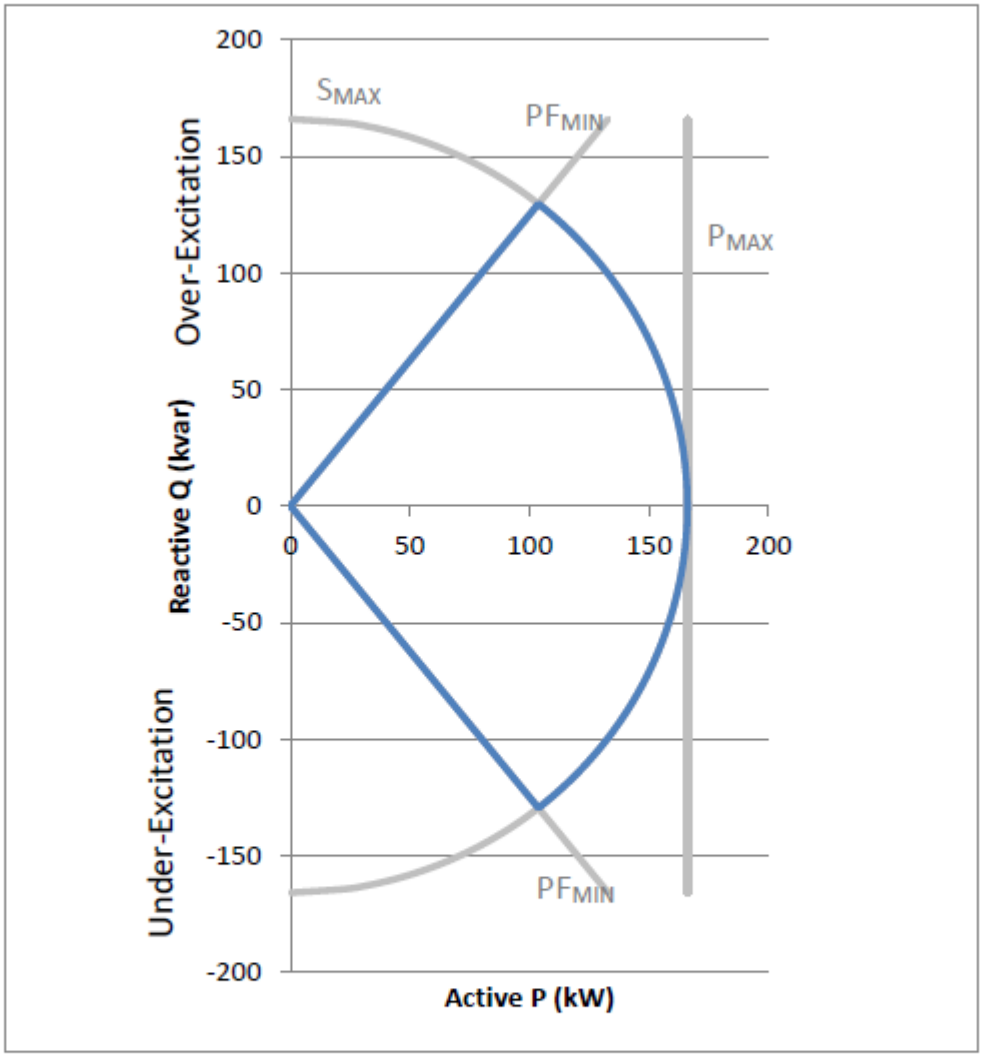

Nameplate Operating Reactive Capability	Inverter Limit
S Limit	166kVA
P Limit	166kW
Over-Excitation p.f. limit	.80
Under-Excitation p.f. limit	.80

XGI 1500V 150kW/166kVA – Reactive Capability Data

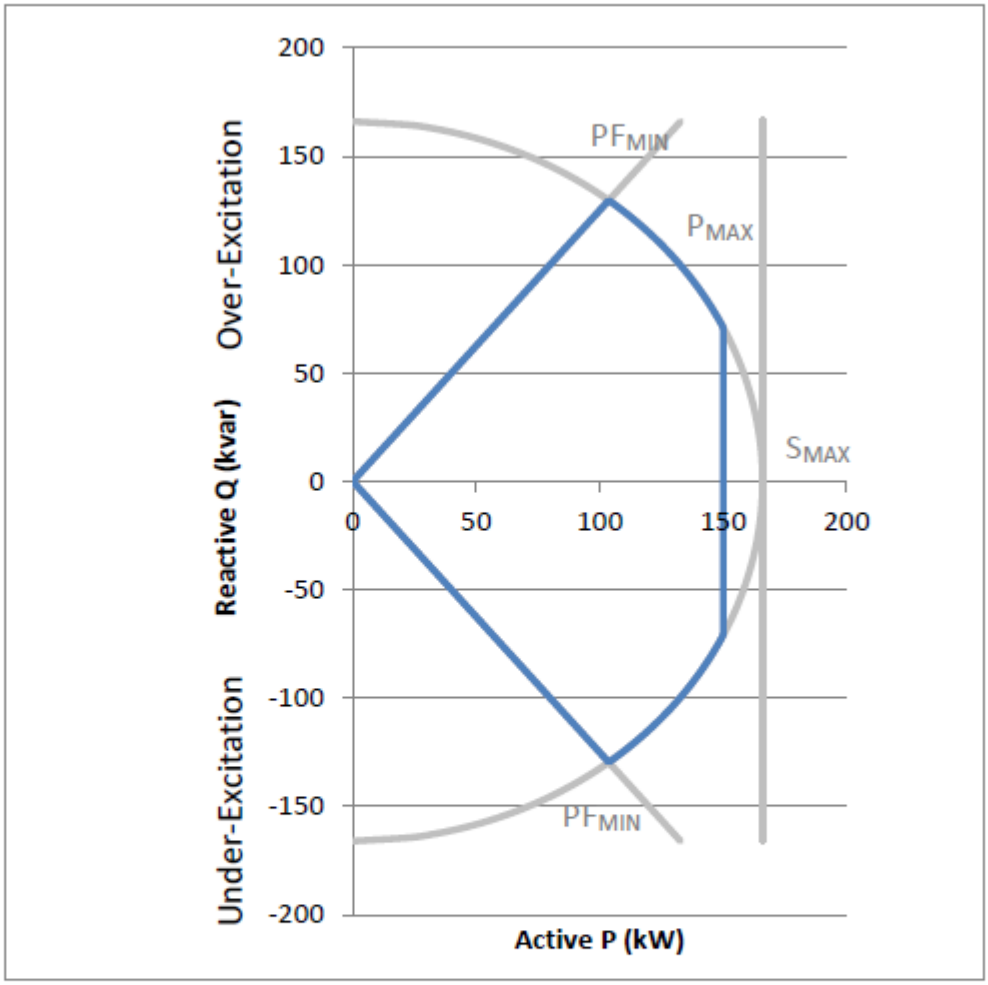

Nameplate Operating Reactive Capability	Inverter Limit
S_{MAX}	166kVA
P_{MAX}	150kW
Over-Excitation PF_{MIN}	.80
Under-Excitation PF_{MIN}	.80

XGI 1500V 125kW/150kVA – Reactive Capability Data

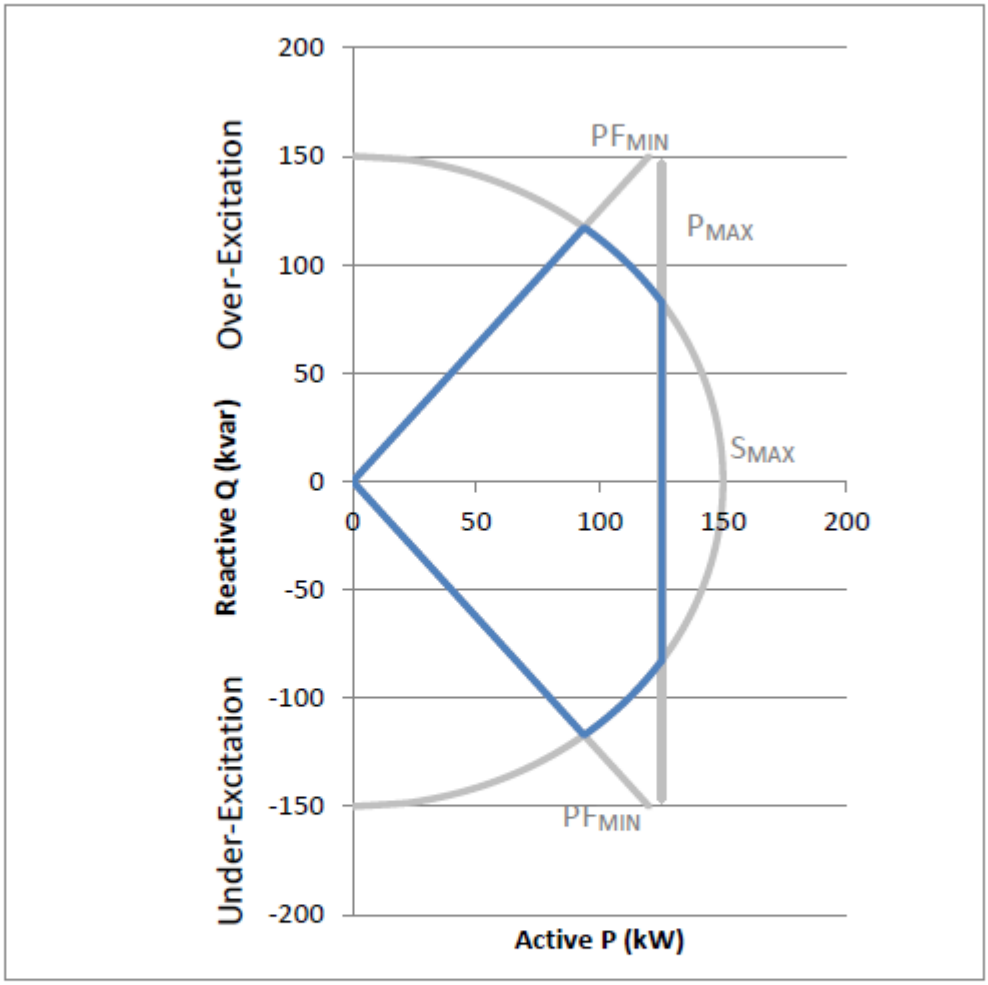

Nameplate Operating Reactive Capability	Inverter Limit
S_{MAX}	150kVA
P_{MAX}	125kW
Over-Excitation PF_{MIN}	.80
Under-Excitation PF_{MIN}	.80

XGI 1500V 125kW/125kVA – Reactive Capability Data

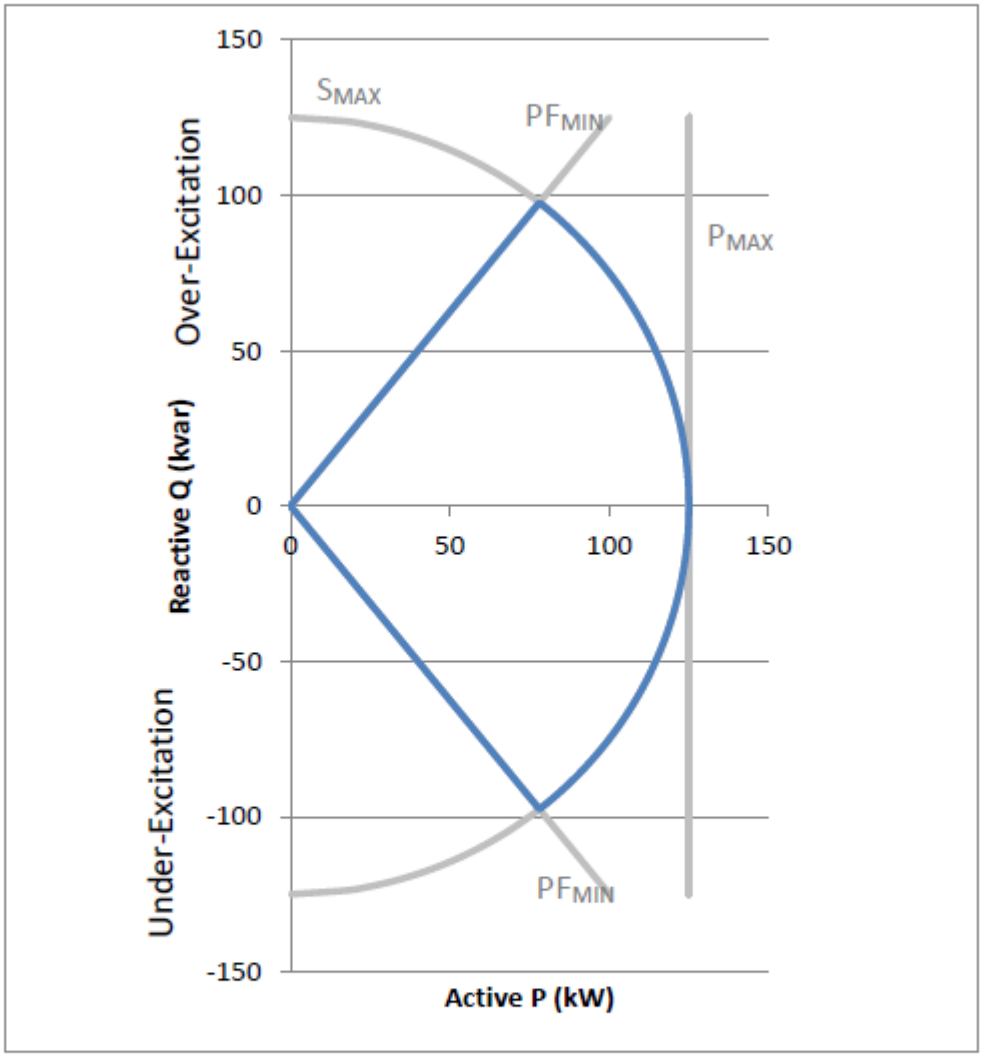

Nameplate Operating Reactive Capability	Inverter Limit
S Limit	125kVA
P Limit	125kW
Over-Excitation p.f. limit	.80
Under-Excitation p.f. limit	.80

11 Options

Yaskawa Solectria Solar offers two 1500V PV Source Circuit Combiner product lines, designed exclusively to pair with SOLECTRIA XGI 1500 inverters. The Attachable Combiners (CA-XGI1500 series) are designed to mate directly to the XGI 1500 inverter and are for use in distributed PV system designs where XGI 1500 inverters with Attachable Combiners are located at positions throughout a PV array field. The Remote Combiners (CR-XGI1500 series) have similar features and models, and are designed for a centralized or clustered deployment of multiple XGI 1500 inverters with the Remote Combiners distributed throughout the PV array field. The combiners match the XGI 1500 in specifications, quality and appearance. See Figure 11-1 for an illustration of the use of the two optional XGI combiner types.

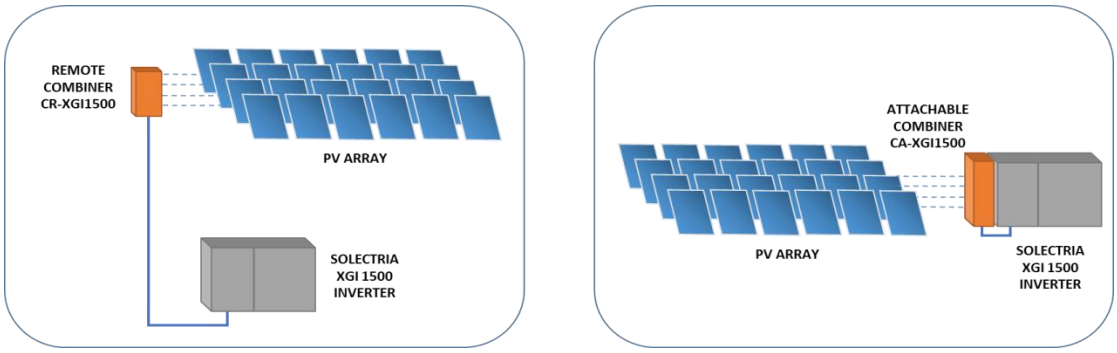

Figure 11-1 Illustration of XGI 1500 Combiner Usage

11.1 Attachable Combiner Box (Optional)

The SOLECTRIA XGI 1500 can be ordered with an optional Attachable Combiner (CA-XGI1500 series). The Attachable Combiner is intended to be installed immediately adjacent to the XGI 1500 inverter. This combination is typically used in distributed PV system architecture. See Table 11-1 below for the specifications of the CA-XGI1500 series combiners.

Table 11-1 Attachable Combiner Specifications

ATTACHABLE COMBINER CA-XGI1500 Series	1500V STRING COMBINERS EXCLUSIVELY FOR USE WITH XGI1500 INVERTERS		
PV Source Circuit Input Wire Compatibility	14 - 4 AWG		
PV Ourput Circuit Wire Compatibility	Compression Terminal: 1 conductor, 1/0 - 750 kcmil 2 conductors, 1/0 - 600 kcmil		
Maximum Voltage	1500 VDC		
Fuse Rating Options	15A or 20A (fuses included)	25A	30A
Fused Positions	16 / 20 / 24 / 26 / 28	20	16
Fuse Configuration	Both Positive and Negative Polarities Fused		
Input PV Source Circuit Configuration	Ungrounded PV Source Circuits Only		
DC Disconnect	2-Pole DC Disconnect (On the XGI 1500 Inverter) Positive and Negative Poles Switched, 250A		
Temperature Range	-40°F to 122°F (-40C to +50C)		
Mounting Orientation	Vertical orientation located adjacent to the XGI 1500 inverter		
Safety Certification & Listing / Certification Agency	UL 1741 / Intertek		
Standard Warranty	5 Years		
Overall Dimensions	Height: 29.5 in. (750 mm) | Width: 15 in. (380 mm) Depth: 10.6 in. (260 mm)		
Enclosure Material, Weight and Rating	Polyester Powder Coated Aluminum 75 lbs (34 kg), NEMA Type 4X		
Surge Protection (Specific Models Only)	Both positive and negative polarities		

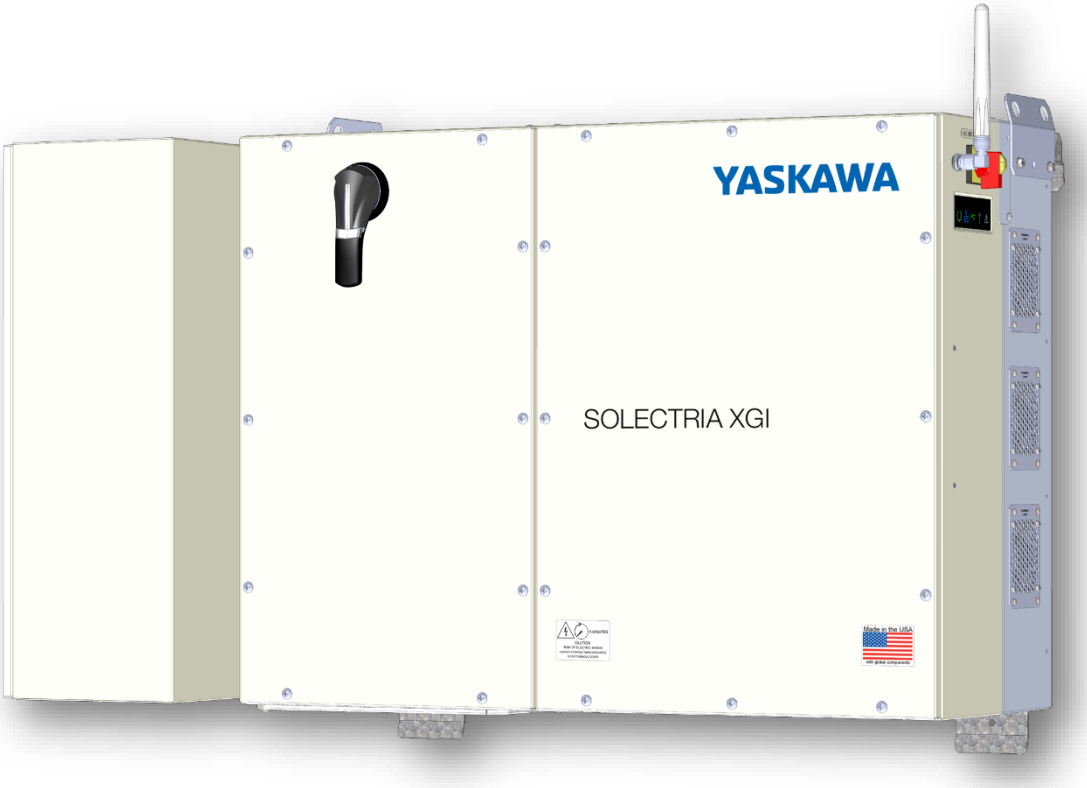

Figure 11-2 SOLECTRIA XGI 1500 with the Attachable Combiner Box

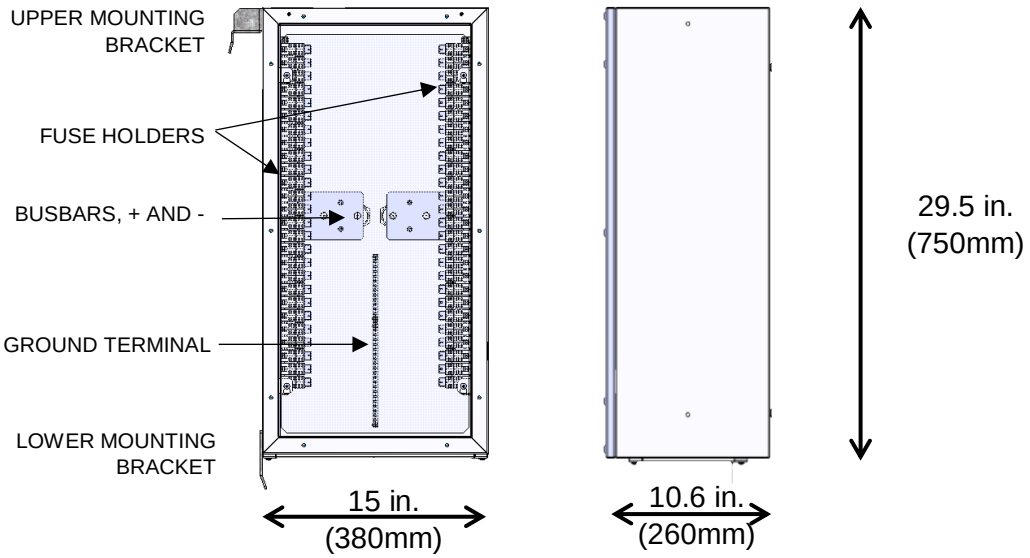

Figure 11-3 SOLECTRIA XGI 1500 Attached Combiner Box

11.2 Remote Combiner (Optional)

Yaskawa Solectria Solar also offers a Remote Combiner (CR-XGI1500 series) that is exclusively compatible with the XGI 1500. The Remote Combiner is intended to be installed in the vicinity of the PV array and is typically used when the inverters are clustered in a “virtual central” type PV system architecture. See Table 11-2 below for the specifications of the CR-XGI1500 series combiners.

Table 11-2 Remote Combiner Box Specifications

REMOTE COMBINER CR-XGI1500 Series	1500V STRING COMBINERS EXCLUSIVELY FOR USE WITH XGI1500 INVERTERS		
PV Source Circuit Input Wire Compatibility	14 - 4 AWG		
PV Ourput Circuit Wire Compatibility	Compression Terminal: 1 conductor, 1/0 - 500 kcmil 2 conductors, 1/0 - 500 kcmil		
Maximum Voltage	1500 VDC		
Fuse Rating Options	15A or 20A (fuses included)	25A	30A
Fused Positions	16 / 20 / 24 / 26 / 28	20	16
Fuse Configuration	Both Positive and Negative Polarities Fused		
Input PV Source Circuit Configuration	Ungrounded PV Source Circuits Only		
DC Disconnect	2-Pole DC Disconnect, Integrated Positive and Negative Poles Switched, 250A		
Temperature Range	-40°F to 122°F (-40C to +50C)		
Mounting Orientations	Vertical, Horizontal or Angled		
Safety Certification & Listing / Certification Agency	UL 1741 / Intertek		
Standard Warranty	5 Years		
Overall Dimensions	Height: 29.5 in. (750 mm) | Width: 18.1 in. (460 mm) Depth: 11 in. (280 mm)		
Enclosure Material, Weight and Rating	Polyester Powder Coated Aluminum 85 lbs (38.6 kg), NEMA Type 4X		
Surge Protection (Specific Models Only)	Both positive and negative polarities		

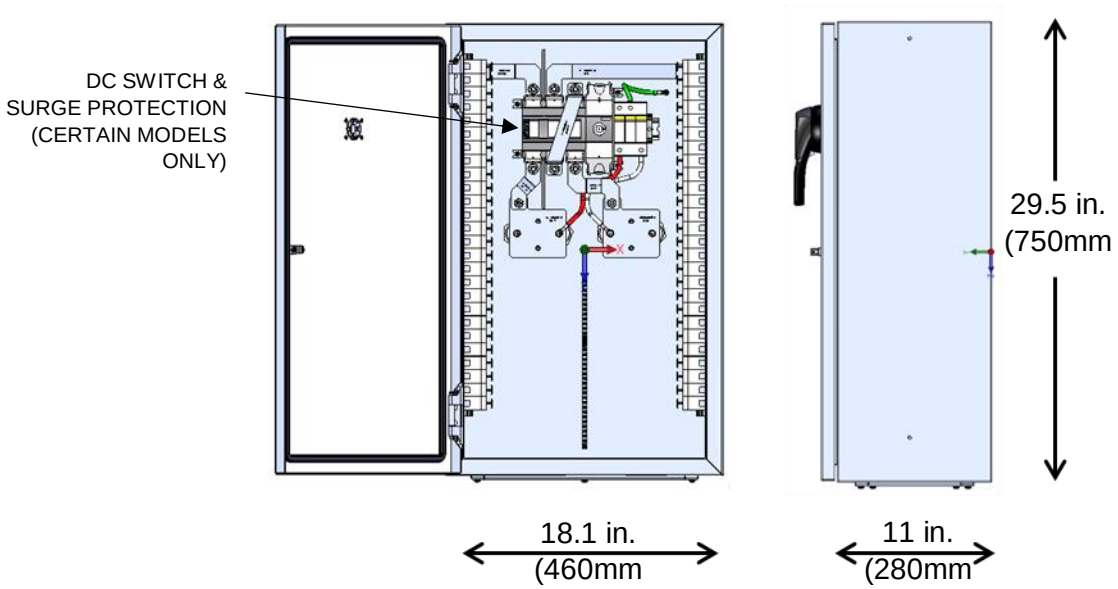

Figure 11-4 SOLECTRIA XGI 1500 Remote Combiner Box

12 Configuration with Low Grid SCR Values

For proper and trouble-free operation, the number of XGI 1500 inverters that can be connected to the grid at a single point of interconnection (POI) is limited in circumstances where the grid has a very low SCR value. At very low SCR values, resonance on the AC voltage waveform can occur, owing to the combination of the impedances of the inverters, transformer and grid. When sufficient AC voltage resonance occurs, the XGI 1500 inverter will detect the grid AC voltage as too high and will shut down safely. Field experience, analysis and laboratory testing have led to guidelines for proper configuration of XGI 1500 inverters with a common POI. Refer to *XGI 1500 Inverter Configuration Limits with Low Grid SCR Values.* This document provides tables that correspond to specific short-circuit ratio (SCR) scenarios, covering values from 2.0 to 6.0. and can be accessed at www.solectria.com.

13 Power Limiting Service

Yaskawa Solectria Solar offers Power Limiting Services for XGI 1500 inverters to support projects requiring verified, secure kW or kVA limits for interconnection compliance. These services include YSS-applied settings, secured through YSS-only accessible configuration, along with optional field labeling for AHJ or utility documentation needs. For full technical details, service descriptions, and requirements, refer to the Power Limiting datasheet available at solectria.com/downloads. The same page also provides the Power Limiting Intake Form needed to request service. For additional questions or project-specific guidance, contact appeng@solectria.com.

14 Appendix

14.1 Warranty and RMA Instructions

For all warranty and RMA information, please visit www.solectria.com

The Yaskawa Solectria Solar Support, Warranty and RMA process provides a pathway to evaluate, repair, and replace eligible equipment while minimizing downtime. Customers must contact Technical Support first, as all troubleshooting, part authorization, and RMA case creation begin with a support-initiated case. Only trained personnel with authorization should perform part replacements, and inverters should not be uninstalled for warranty claims unless explicitly directed by Technical Support. Depending on warranty status, training, and Spare Parts Kit availability, parts may be shipped under warranty or quoted along with any required field service.

For complete details, refer to the Support, Warranty & RMA documents.

14.2 Yaskawa Solectria Solar Contact Information

Table 14-1 Yaskawa Solectria Solar Contact Information

Telephone	978.683.9700
Fax	978.683.9702
Sales Support	inverters@solectria.com
Customer Support	978.683.9700 x2
Website	www.solectria.com

14.3 **Authorization to Mark**

intertek
Total Quality. Assured.

AUTHORIZATION TO MARK

This authorizes the application of the Certification Mark(s) shown below to the models described in the Product(s) Covered section when made in accordance with the conditions set forth in the Certification Agreement and Listing Report. This authorization also applies to multiple listee model(s) identified on the correlation page of the Listing Report.

This document is the property of Intertek Testing Services and is not transferable. The certification mark(s) may be applied only at the location of the Party Authorized To Apply Mark.

Applicant:	Solectria Renewables LLC	**Manufacturer:**	Yaskawa America Inc
Address:	360 Merrimack Street Bldg 9, Floor 2 LAWRENCE, MA 01843	**Address:**	1067 Johnson Drive Buffalo Grove, IL 60089
Country:	USA	**Country:**	USA
Contact:	Wei Zhou Jihua Ma	**Contact:**	Arthur Folta Joe Kleczkowski
Phone:	(978) 683-9700	**Phone:**	847-887-7555 847-887-7658
FAX:	(978) 683-9702	**FAX:**	414-856-2501
Email:	wei.zhou@solectria.com jihua.ma@solectria.com	**Email:**	arthur_folta@yaskawa.com joe_kleczkowski@yaskawa.com

Party Authorized To Apply Mark: Same as Manufacturer
Report Issuing Office: Cortland NY, 13045 USA

Control Number: 5010838 **Authorized by:** Natalie Tokarey
for L. Matthew Snyder, Certification Manager

ETL LISTED US
Intertek

This document supersedes all previous Authorizations to Mark for the noted Report Number.

This Authorization to Mark is for the exclusive use of Intertek's Client and is provided pursuant to the Certification agreement between Intertek and its Client. Intertek's responsibility and liability are limited to the terms and conditions of the agreement. Intertek assumes no liability to any party, other than to the Client in accordance with the agreement, for any loss, expense or damage occasioned by the use of this Authorization to Mark. Only the Client is authorized to permit copying or distribution of this Authorization to Mark and then only in its entirety. Use of Intertek's Certification mark is restricted to the conditions laid out in the agreement and in this Authorization to Mark. Any further use of the Intertek name for the sale or advertisement of the tested material, product or service must first be approved in writing by Intertek. Initial Factory Assessments and Follow up Services are for the purpose of assuring appropriate usage of the Certification mark in accordance with the agreement, they are not for the purposes of production quality control and do not relieve the Client of their obligations in this respect.

Intertek Testing Services NA Inc.
545 East Algonquin Road, Arlington Heights, IL 60005
Telephone 800-345-3851 or 847-439-5667 Fax 312-283-1672

Standard(s):	Inverters, Converters, Controllers and Interconnection System Equipment for use with Distributed Energy Resources [UL 1741:2010 Ed.2+R:15Feb2018] Supplement SA to UL 1741 - Inverters, Converters, Controllers and Interconnection System Equipment for use with Distributed Energy Resources [UL 1741:2010 Ed.2 (Supplement SA)+R:15Feb2018]
Product:	Grid Support Utility Interactive Inverter
Brand Name:	Yaskawa Solectria Solar
Models:	XGI 1500-125/125-UL, XGI 1500-125/150-UL, XGI 1500-150/166-UL, XGI 1500-166/166-UL, XGI 1500-125/125-3S, XGI 1500-166/166-3S.

ATM for Report 103561512CRT-001c Page 1 of 1 ATM Issued: 23-Dec-2020
ED 16.3.15 (15-Oct-20) Mandatory