REVISIONS						
REV	EC#	DESCRIPTION	DRAWN	CHECKED	APPROVED	DATE
A	1100	• INITIAL RELEASE	A. FITZPATRICK	M. KELLY	A. FITZPATRICK	1/17/2014

NOTES:

1. THIS DOCUMENT IS INTENDED TO ILLUSTRATE THE APPLICATION OF A 600VAC TRANSFORMER WITH OUTDOOR ENCLOSURE WITH A SOLECTRIA RENEWABLES SGI 500XT INVERTER. EXAMPLES OF THE FOLLOWING ARE GIVEN:
   - INVERTER TO TRANSFORMER CONDUIT ROUTING
   - CONDUIT AND CONDUCTOR SIZING
   - VOLTAGE DROP CALCULATIONS
   - ESTIMATED COSTS
2. THIS DOCUMENT IS NOT INTENDED TO BE USED AS A FINAL DESIGN DOCUMENT. ADDITIONAL ENGINEERING DESIGN IS REQUIRED TO ACCOUNT FOR LOCAL CODE COMPLIANCE AND MANUFACTURER'S INSTALLATION REQUIREMENTS. IN PARTICULAR, CONDUIT ROUTING AND ENCLOSURE PENETRATIONS SHOULD COMPLY WITH MANUFACTURER'S SUGGESTIONS.
3. SUGGESTED TRANSFORMERS WITH OUTDOOR ENCLOSURES ARE LISTED BELOW
   - HAMMOND POWER SOLUTIONS NMK500BP - NEMA 3R ENCLOSURE
   - HAMMOND POWER SOLUTIONS NMK500BPAH8 - NEMA 3R ENHANCED ENCLOSURE

   A NEMA 3R ENHANCED ENCLOSURE PROVIDES SUPERIOR PROTECTION TO A NEMA 3R ENCLOSURE BY PREVENTING INGRESS OF CURCULATING DUST AND SNOW. ADDITIONAL TRANSFORMERS WITH OUTDOOR ENCLOSURES CAN BE USED. SEE SOLECTRIA RENEWABLES ESD-ELC-20 FOR FURTHER INFORMATION.

BOM ID	DESCRIPTION
1	SGI 500XT INVERTER
2	TRANSFORMER WITH OUTDOOR ENCLOSURE
3	CONDUIT, FITTINGS AND CONDUCTORS AS REQUIRED

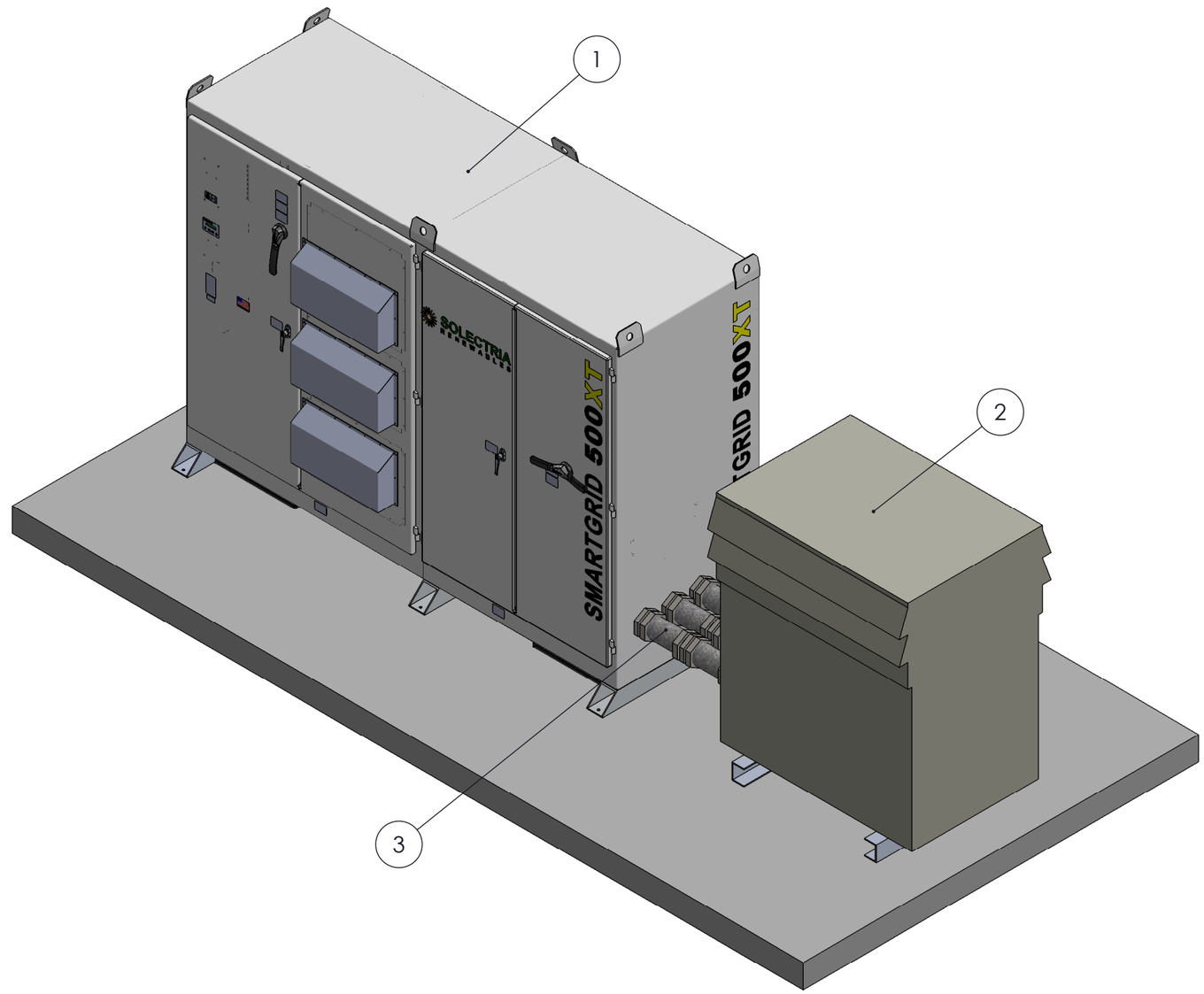

SOLECTRIA RENEWABLES
WWW.SOLECTRIA.COM

PRODUCT: **600VAC APPLICATION OF EXTERNAL TRANSFORMER FOR SGI 500XT**

VIEW: APPLICATION INTRODUCTION

DOCUMENT: DOCR-070368 REV: A

SIZE: B | ALL DIMENSIONS ARE IN INCHES | DO NOT SCALE

CUSTOMER INTERFACE DRAWING

PLEASE NOTE: ALL INFORMATION CONTAINED WITHIN THIS DOCUMENT IS SUBJECT TO CHANGE WITHOUT NOTICE

SCALE: 1:24 | SHEET 1 OF 8

ISO 04-04-26 REV. A

NOTES:

1. EXAMPLE OF INVERTER TO TRANSFORMER CONDUIT ROUTING SHOWN FOR THE FOLLOWING CONFIGURATION:
   - TRANSFORMER ENCLOSURE: NEMA 3R (NMK500BP)
   - CONDUIT LOCATION: SIDE ENTRY

FRONT VIEW

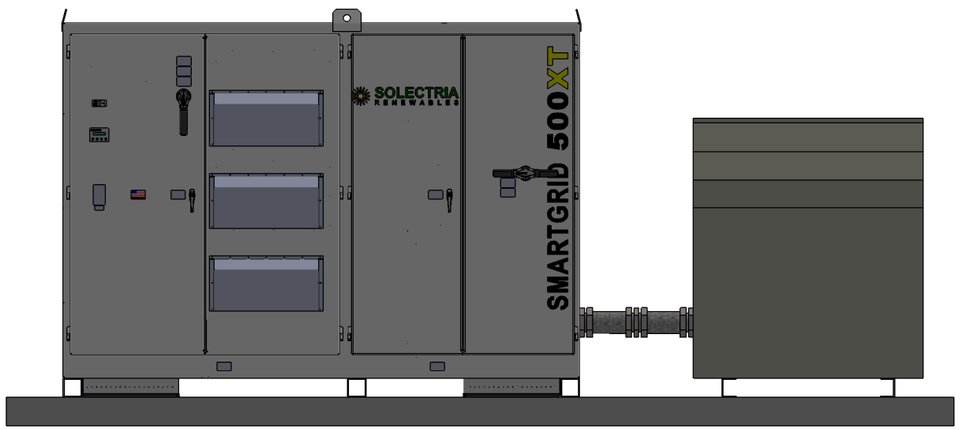

ANGLED VIEW

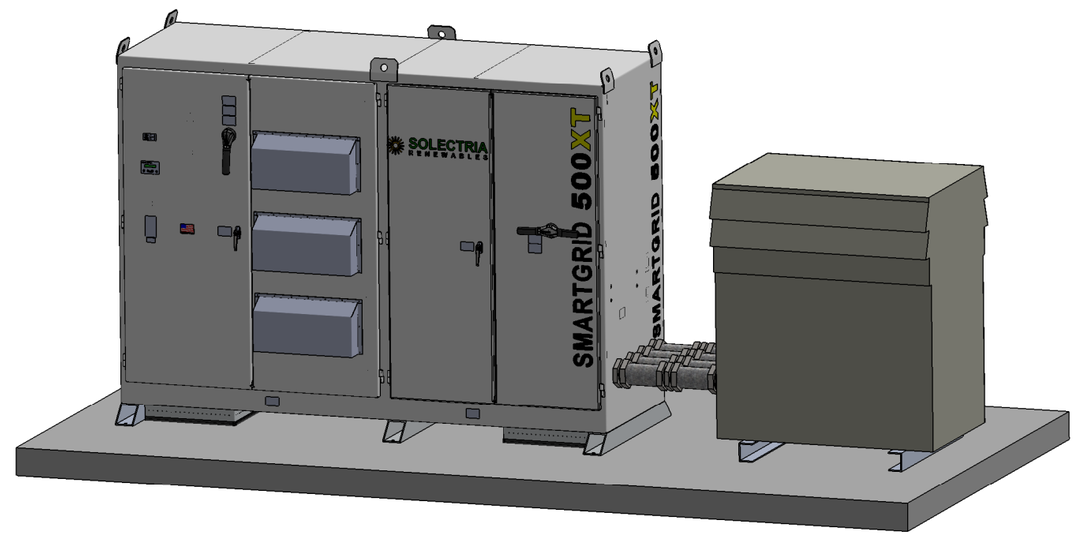

SOLECTRIA RENEWABLES WWW.SOLECTRIA.COM		
PRODUCT: **600VAC APPLICATION OF EXTERNAL TRANSFORMER FOR SGI 500XT**		
VIEW: NEMA 3R ENCLOSURE WITH SIDE ENTRY CONDUIT		
DOCUMENT: DOCR-070368		REV: A
SIZE: **B**	ALL DIMENSIONS ARE IN INCHES	DO NOT SCALE
CUSTOMER INTERFACE DRAWING		
PLEASE NOTE: ALL INFORMATION CONTAINED WITHIN THIS DOCUMENT IS SUBJECT TO CHANGE WITHOUT NOTICE		
SCALE: 1:32	SHEET 2 OF 8	

NOTES:

1. EXAMPLE OF INVERTER TO TRANSFORMER CONDUIT ROUTING SHOWN FOR THE FOLLOWING CONFIGURATION:
   - TRANSFORMER ENCLOSURE: NEMA 3R (NMK500BP)
   - CONDUIT LOCATION: UNDERGROUND

FRONT VIEW

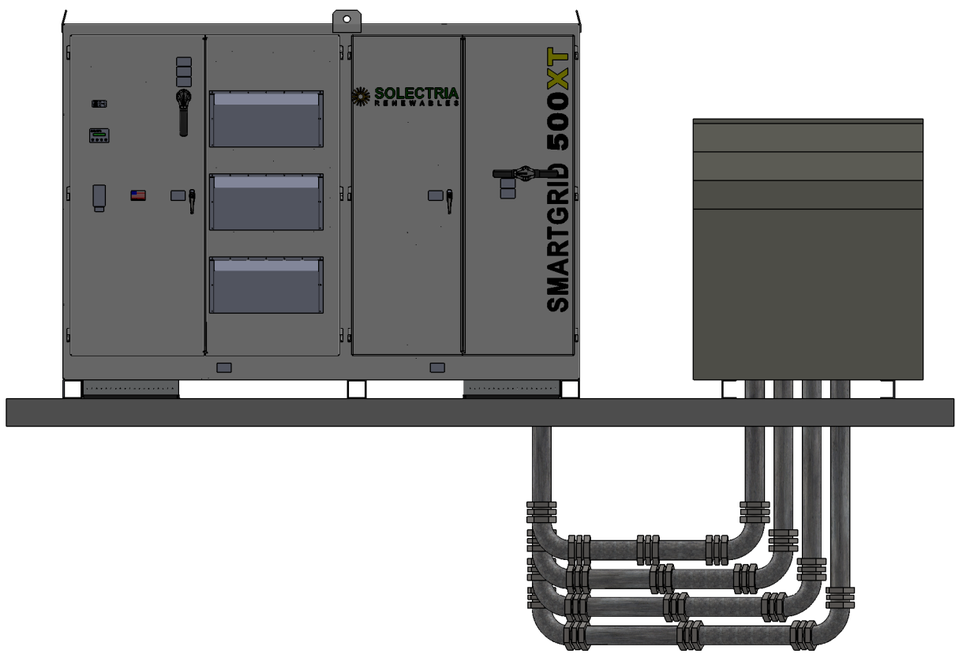

ANGLED VIEW

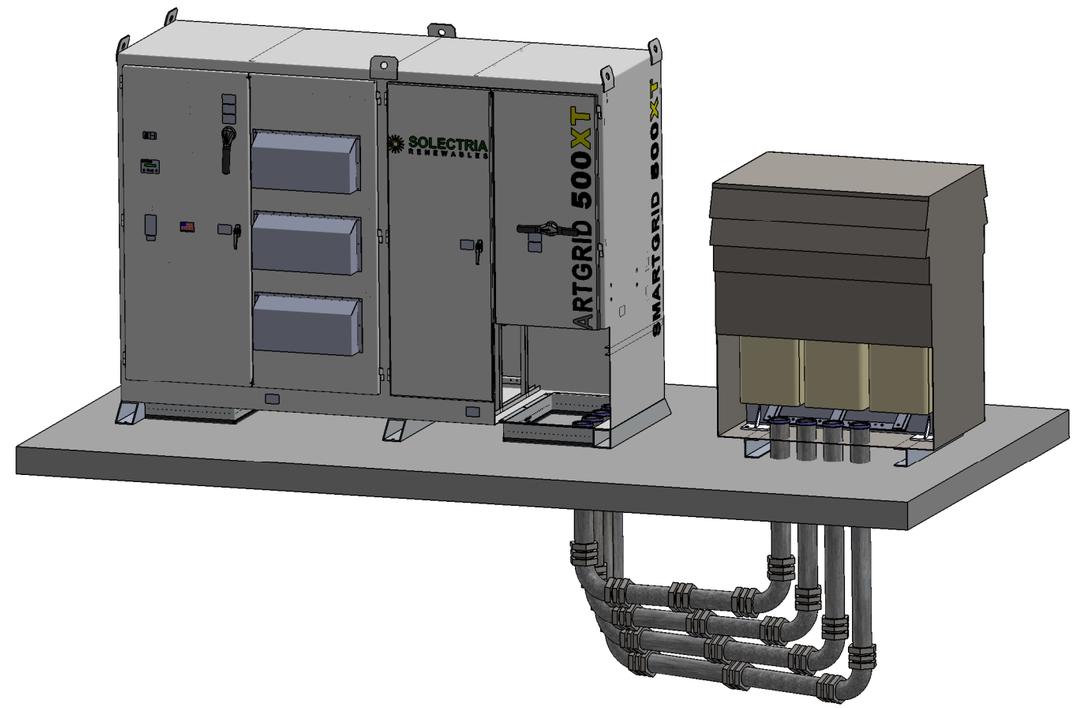

NOTE: CUTAWAY SHOWN FOR CLARITY

SOLECTRIA RENEWABLES WWW.SOLECTRIA.COM		
PRODUCT: **600VAC APPLICATION OF EXTERNAL TRANSFORMER FOR SGI 500XT**		
VIEW: NEMA 3R ENCLOSURE WITH UNDERGROUND CONDUIT		
DOCUMENT: DOCR-070368	REV: A	
SIZE: **B**	ALL DIMENSIONS ARE IN INCHES	DO NOT SCALE
CUSTOMER INTERFACE DRAWING		
PLEASE NOTE: ALL INFORMATION CONTAINED WITHIN THIS DOCUMENT IS SUBJECT TO CHANGE WITHOUT NOTICE		
SCALE: 1:32	SHEET 3 OF 8	

NOTES:

1. EXAMPLE OF INVERTER TO TRANSFORMER CONDUIT ROUTING SHOWN FOR THE FOLLOWING CONFIGURATION:
   - TRANSFORMER ENCLOSURE: NEMA 3R ENHANCED (NMK500BPAH8)
   - CONDUIT LOCATION: SIDE ENTRY

FRONT VIEW

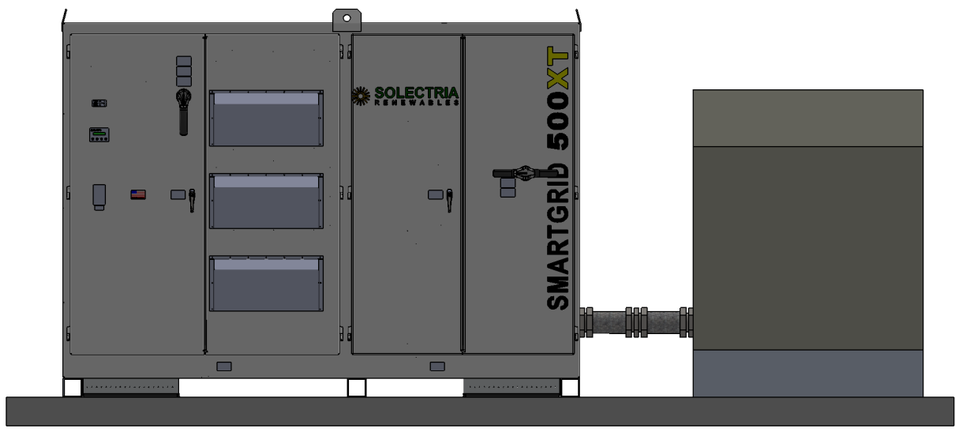

ANGLED VIEW

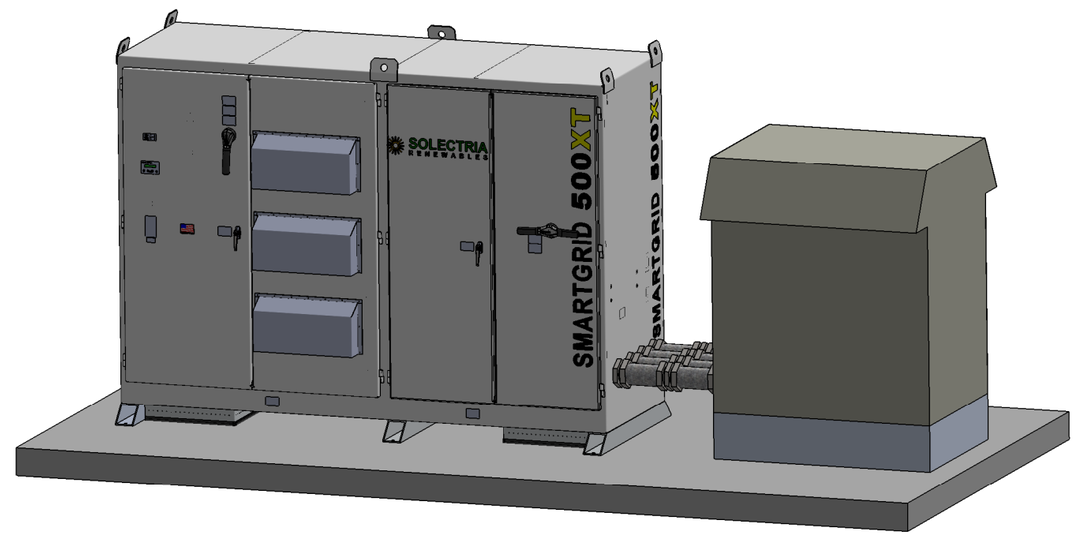

SOLECTRIA RENEWABLES WWW.SOLECTRIA.COM		
PRODUCT: **600VAC APPLICATION OF EXTERNAL TRANSFORMER FOR SGI 500XT**		
VIEW: NEMA 3R ENHANCED ENCLOSURE WITH SIDE ENTRY CONDUIT		
DOCUMENT: DOCR-070368		REV: A
SIZE: **B**	ALL DIMENSIONS ARE IN INCHES	DO NOT SCALE
CUSTOMER INTERFACE DRAWING		
PLEASE NOTE: ALL INFORMATION CONTAINED WITHIN THIS DOCUMENT IS SUBJECT TO CHANGE WITHOUT NOTICE		
SCALE: 1:32	SHEET 4 OF 8	

NOTES:

1. EXAMPLE OF INVERTER TO TRANSFORMER CONDUIT ROUTING SHOWN FOR THE FOLLOWING CONFIGURATION
   - TRANSFORMER ENCLOSURE: NEMA 3R ENHANCED (NMK500BPAH8)
   - CONDUIT LOCATION: UNDERGROUND

FRONT VIEW

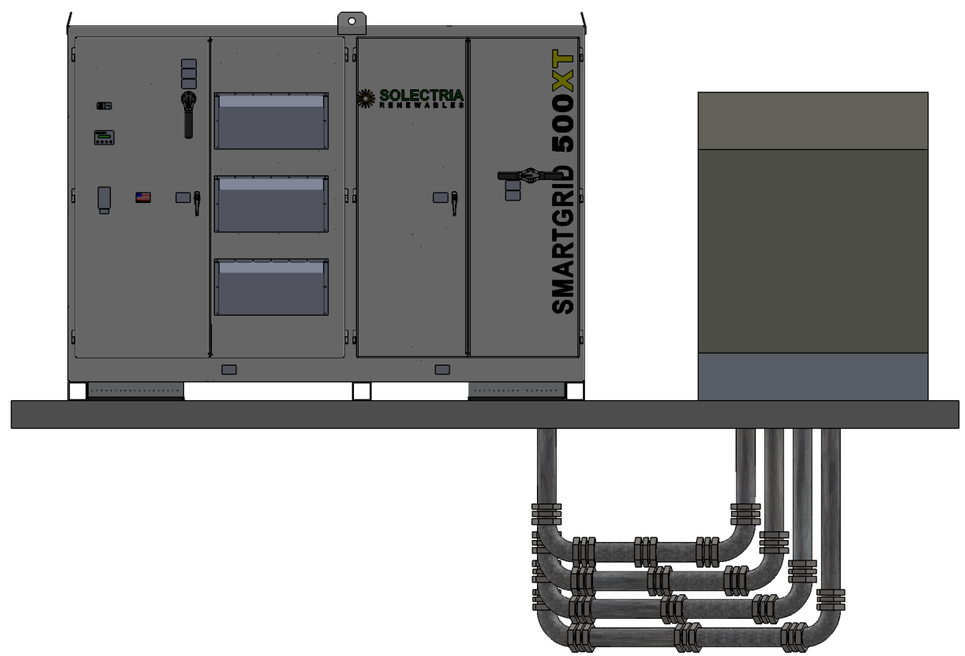

ANGLED VIEW

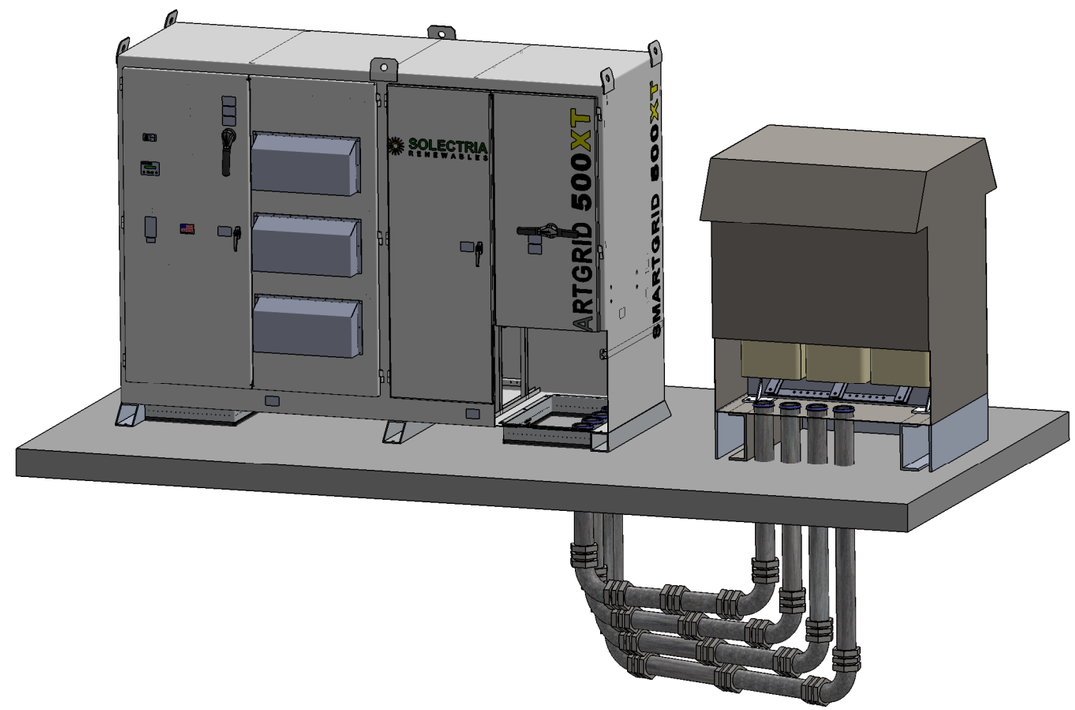

NOTE: CUTAWAY SHOWN FOR CLARITY

SOLECTRIA RENEWABLES
WWW.SOLECTRIA.COM

PRODUCT: **600VAC APPLICATION OF EXTERNAL TRANSFORMER FOR SGI 500XT**		
VIEW: NEMA 3R ENHANCED ENCLOSURE WITH UNDERGROUND CONDUIT		
DOCUMENT: DOCR-070368	REV: A	
SIZE: B	ALL DIMENSIONS ARE IN INCHES	DO NOT SCALE
CUSTOMER INTERFACE DRAWING		
PLEASE NOTE: ALL INFORMATION CONTAINED WITHIN THIS DOCUMENT IS SUBJECT TO CHANGE WITHOUT NOTICE		
SCALE: 1:32	SHEET 5 OF 8	

CONDUIT AND CONDUCTOR SIZING AND ESTIMATED COSTS

INVERTER CONTINUOUS OUTPUT CURRENT (A)	1387
125% OF INVERTER CONTINUOUS OUTPUT CURRENT (A)	1734
OCPD RATING (A)	1800
CONDUCTOR AMPACITY REQUIREMENT (A)	1800

CONDUIT SIZING AND COST FOR COPPER CONDUCTORS													
CONDUCTOR SIZING				CONDUIT SIZING				ESTIMATED COST, NEMA 3R TRANSFORMER ENCLOSURE[3]			ESTIMATED COST, NEMA 3R ENHANCED TRANSFORMER ENCLOSURE[4]		
NUMBER OF PARALLEL SETS OF (3) PHASE CONDUCTORS	PHASE CONDUCTOR SIZE (KCMIL)[1]	EQUIPMENT GROUNDING CONDUCTOR SIZE (KCMIL)[2]	TOTAL AMPACITY (A)[1]	CONDUIT CROSS SECTIONAL AREA REQUIRED, 40% FILL, RHW-2 (mm^2)	CONDUIT SIZE, EMT (METRIC DESIGNATOR)	CONDUIT SIZE, RMC (METRIC DESIGNATOR)	CONDUIT SIZE, PVC SCH. 80 (METRIC DESIGNATOR)	EMT	RMC	PVC SCH. 80	EMT	RMC	PVC SCH. 80
4	700	250	1840	7576	103	103	129	$19,218	$19,928	$19,596	$22,602	$23,312	$22,979
5	500	250	1900	5893	91	91	103	$17,558	$18,328	$17,271	$20,942	$21,712	$20,655
6	350	250	1860	4823	78	78	91	$17,038	$17,817	$16,722	$20,422	$21,201	$20,106

CONDUIT SIZING AND COST FOR ALUMINUM CONDUCTORS													
CONDUCTOR SIZING				CONDUIT SIZING				**ESTIMATED COST, NEMA 3R TRANSFORMER ENCLOSURE[3]**			ESTIMATED COST, NEMA 3R ENHANCED TRANSFORMER ENCLOSURE[4]		
NUMBER OF PARALLEL SETS OF (3) PHASE CONDUCTORS	PHASE CONDUCTOR SIZE (KCMIL)[1]	EQUIPMENT GROUNDING CONDUCTOR SIZE (KCMIL)[2]	TOTAL AMPACITY (A)[1]	CONDUIT CROSS SECTIONAL AREA REQUIRED, 40% FILL, XHHW-2 (mm^2)	CONDUIT SIZE, EMT (METRIC DESIGNATOR)	CONDUIT SIZE, RMC (METRIC DESIGNATOR)	CONDUIT SIZE, PVC SCH. 80 (METRIC DESIGNATOR)	**EMT**	**RMC**	**PVC SCH. 80**	EMT	RMC	PVC SCH. 80
5	700	400	1875	5734	91	91	103	**$15,295**	**$16,065**	**$15,009**	$18,679	$19,449	$18,392
6	500	400	1860	4312	78	78	91	**$14,998**	**$15,777**	**$14,682**	$18,382	$19,161	$18,066

TABLE FOOTNOTES:

1. 30°C AMBIENT TEMPERATURE, 75°C CONDUCTORS AND TERMINATION TEMPERATURE, NOT MORE THAN (3) CURRENT CARRYING CONDUCTORS IN A RACEWAY
2. ONE EGC PER CONDUIT, 1800A OCPD
3. 25 FOOT RUN, INCLUDES CONDUCTORS, CONDUIT, BASIC FITTINGS AND EXTERNAL TRANSFORMER WITH NEMA 3R RATING
4. 25 FOOT RUN, INCLUDES CONDUCTORS, CONDUIT, BASIC FITTINGS AND EXTERNAL TRANSFORMER WITH ENHANCED NEMA 3R RATING

SOLECTRIA RENEWABLES
WWW.SOLECTRIA.COM

PRODUCT: **600VAC APPLICATION OF EXTERNAL TRANSFORMER FOR SGI 500XT**

VIEW: CONDUIT AND CONDUCTOR SIZING AND ESTIMATED COSTS

DOCUMENT: DOCR-070368 REV: A

SIZE: B | ALL DIMENSIONS ARE IN INCHES | DO NOT SCALE

CUSTOMER INTERFACE DRAWING

PLEASE NOTE: ALL INFORMATION CONTAINED WITHIN THIS DOCUMENT IS SUBJECT TO CHANGE WITHOUT NOTICE

SCALE: 1:32 | SHEET 6 OF 8

VOLTAGE DROP CALCULATIONS

VOLTAGE DROP FOR COPPER CONDUCTORS												
CONDUCTOR SIZING				VOLTAGE DROP, 3 METER RUN[3]			VOLTAGE DROP, 7.5 METER RUN[3]			VOLTAGE DROP, 30 METER RUN[3]		
NUMBER OF PARALLEL SETS OF (3) PHASE CONDUCTORS	PHASE CONDUCTOR SIZE (KCMIL)[1]	EQUIPMENT GROUNDING CONDUCTOR SIZE (KCMIL)[2]	TOTAL AMPACITY (A)[1]	PVC CONDUIT	ALUMINUM CONDUIT	STEEL CONDUIT	PVC CONDUIT	ALUMINUM CONDUIT	STEEL CONDUIT	PVC CONDUIT	ALUMINUM CONDUIT	STEEL CONDUIT
4	700	250	1840	0.02%	0.02%	0.02%	0.05%	0.06%	0.05%	0.19%	0.24%	0.21%
5	500	250	1900	0.02%	0.03%	0.02%	0.05%	0.06%	0.06%	0.22%	0.26%	0.23%
6	350	250	1860	0.03%	0.03%	0.03%	0.06%	0.07%	0.07%	0.25%	0.29%	0.26%

VOLTAGE DROP FOR ALUMINUM CONDUCTORS												
CONDUCTOR SIZING				VOLTAGE DROP, 3 METER RUN[3]			VOLTAGE DROP, 7.5 METER RUN[3]			VOLTAGE DROP, 30 METER RUN[3]		
NUMBER OF PARALLEL SETS OF (3) PHASE CONDUCTORS	PHASE CONDUCTOR SIZE (KCMIL)[1]	EQUIPMENT GROUNDING CONDUCTOR SIZE (KCMIL)[2]	TOTAL AMPACITY (A)[1]	PVC CONDUIT	ALUMINUM CONDUIT	STEEL CONDUIT	PVC CONDUIT	ALUMINUM CONDUIT	STEEL CONDUIT	PVC CONDUIT	ALUMINUM CONDUIT	STEEL CONDUIT
5	700	400	1875	0.02%	0.03%	0.02%	0.06%	0.07%	0.06%	0.23%	0.27%	0.25%
6	500	400	1860	0.03%	0.03%	0.03%	0.07%	0.08%	0.08%	0.29%	0.32%	0.30%

TABLE FOOTNOTES:

1. 30°C AMBIENT TEMPERATURE, 75°C CONDUCTORS AND TERMINATION TEMPERATURE, NOT MORE THAN (3) CURRENT-CARRYING CONDUCTORS IN A RACEWAY
2. ONE EGC PER CONDUIT, 1800A OCPD
3. 500KW, POWER FACTOR OF 1.0, NOMINAL SYSTEM VOLTAGE OF 600VAC, BALANCED SYSTEM

SOLECTRIA RENEWABLES
WWW.SOLECTRIA.COM

PRODUCT: **600VAC APPLICATION OF EXTERNAL TRANSFORMER FOR SGI 500XT**

VIEW: VOLTAGE DROP CALCULATIONS

DOCUMENT: DOCR-070368 REV: A

SIZE: B | ALL DIMENSIONS ARE IN INCHES | DO NOT SCALE

CUSTOMER INTERFACE DRAWING

PLEASE NOTE: ALL INFORMATION CONTAINED WITHIN THIS DOCUMENT IS SUBJECT TO CHANGE WITHOUT NOTICE

SCALE: 1:32 | SHEET 7 OF 8

SUGGESTED TRANSFORMER WITH OUTDOOR ENCLOSURE DETAILS

NOTES:
1. FOR ADDITIONAL INFORMATION CONTACT TRANSFORMER MANUFACTURER.

INFORMATION FROM:

Hammond Power Solutions Inc.

TRANSFORMER TERMINAL SPECIFICATIONS

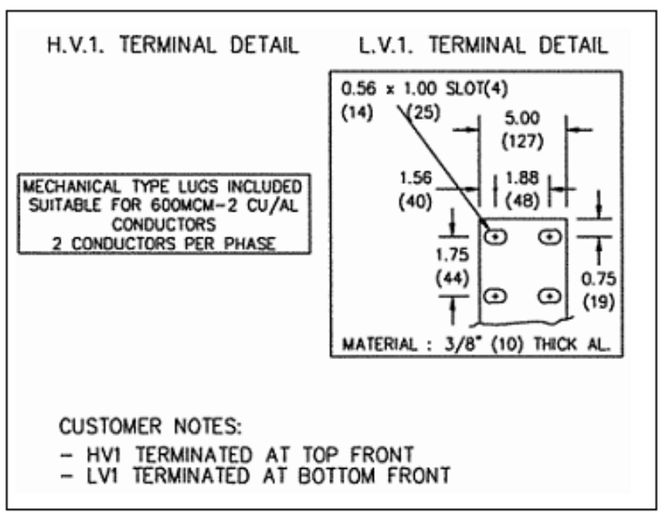

TRANSFORMER NAMEPLATE

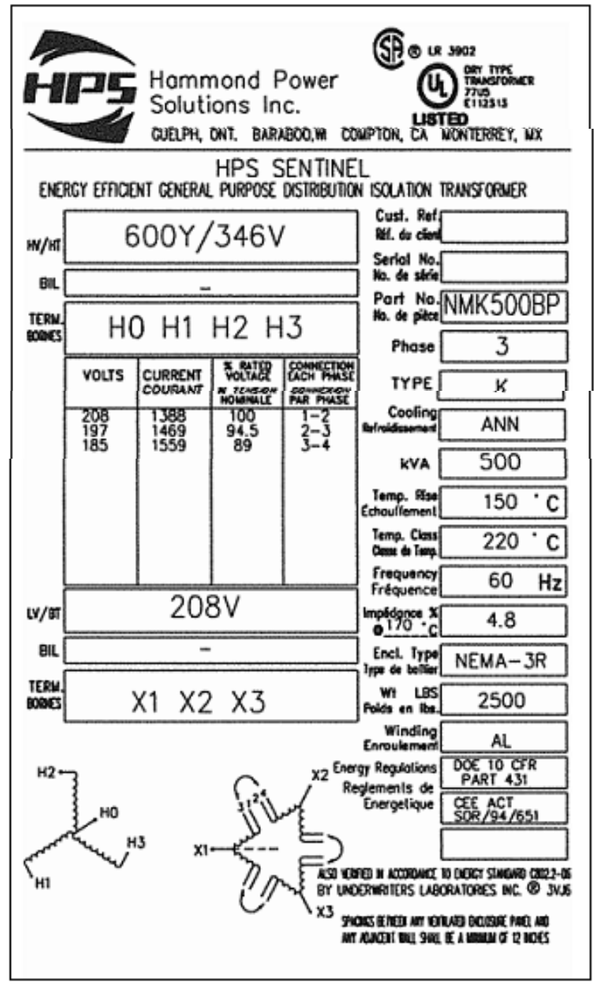

NEMA 3R ENCLOSURE SPECIFICATIONS

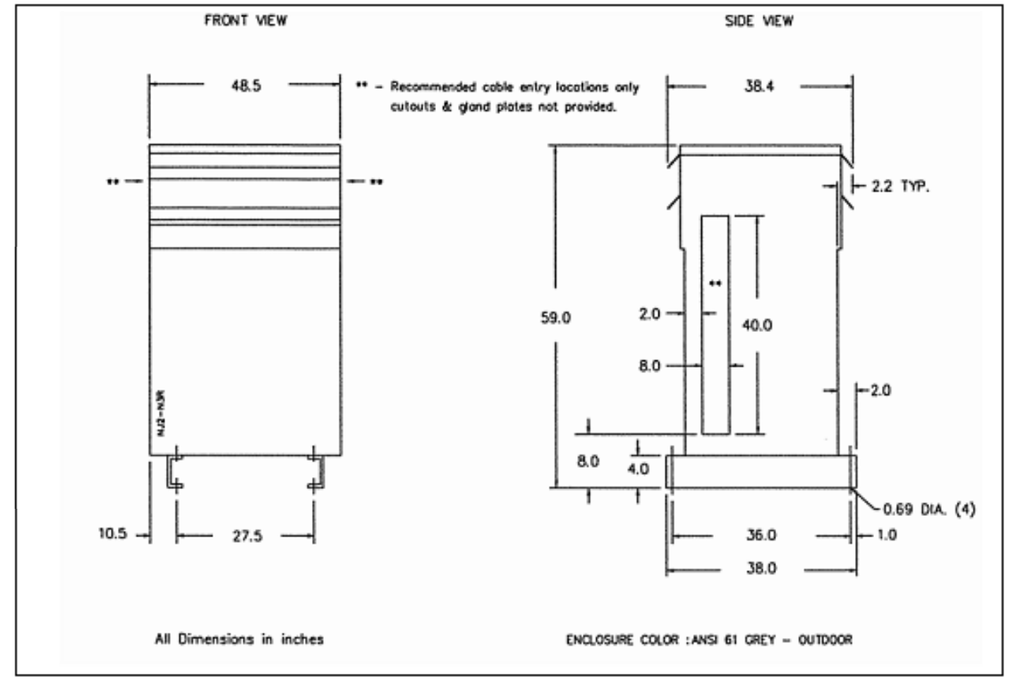

NEMA 3R ENHANCED ENCLOSURE SPECIFICATIONS

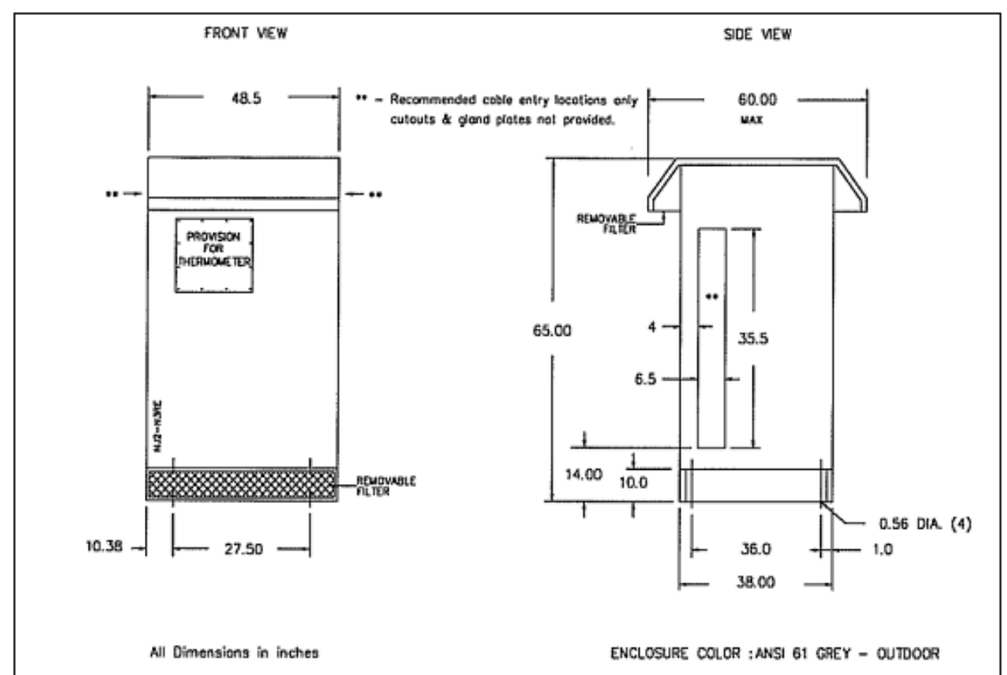

SOLECTRIA RENEWABLES
WWW.SOLECTRIA.COM

PRODUCT:	600VAC APPLICATION OF EXTERNAL TRANSFORMER FOR SGI 500XT
VIEW:	TRANSFORMER DETAILS
DOCUMENT:	DOCR-070368
REV:	A
SIZE:	B
	ALL DIMENSIONS ARE IN INCHES
	DO NOT SCALE
	CUSTOMER INTERFACE DRAWING
	PLEASE NOTE: ALL INFORMATION CONTAINED WITHIN THIS DOCUMENT IS SUBJECT TO CHANGE WITHOUT NOTICE
SCALE:	1:32
SHEET	8 OF 8

ISO 04-04-26 REV. A